US009119163B2

(12) **United States Patent**
Li et al.

(10) **Patent No.: US 9,119,163 B2**
(45) **Date of Patent: Aug. 25, 2015**

(54) **METHODS AND APPARATUS RELATED TO POWER CONTROL AND/OR INTERFERENCE MANAGEMENT IN A MIXED WIRELESS COMMUNICATIONS SYSTEM**

(71) Applicant: **QUALCOMM Incorporated**, San Diego, CA (US)

(72) Inventors: **Junyi Li**, Chester, NJ (US); **Rajiv Laroia**, Far Hills, NJ (US)

(73) Assignee: **QUALCOMM Incorporated**, San Diego, CA (US)

(*) Notice: Subject to any disclaimer, the term of this patent is extended or adjusted under 35 U.S.C. 154(b) by 2 days.

(21) Appl. No.: **13/733,762**

(22) Filed: **Jan. 3, 2013**

(65) **Prior Publication Data**

US 2013/0122947 A1 May 16, 2013

Related U.S. Application Data

(62) Division of application No. 11/764,366, filed on Jun. 18, 2007, now Pat. No. 8,369,800.

(60) Provisional application No. 60/845,053, filed on Sep. 15, 2006.

(51) **Int. Cl.**
H04W 52/24 (2009.01)
H04W 52/26 (2009.01)
(Continued)

(52) **U.S. Cl.**
CPC ***H04W 52/243*** (2013.01); ***H04W 52/265*** (2013.01); ***H04W 52/30*** (2013.01);
(Continued)

(58) **Field of Classification Search**
CPC H04B 1/1026; H04B 3/20; H04L 27/10; H04W 84/12
USPC 455/501
See application file for complete search history.

(56) **References Cited**

U.S. PATENT DOCUMENTS

5,488,631 A * 1/1996 Gold et al. 375/145
5,491,837 A 2/1996 Haartsen
(Continued)

FOREIGN PATENT DOCUMENTS

CN 1386024 A 12/2002
EP 1257140 11/2002
(Continued)

OTHER PUBLICATIONS

International Search Report—PCT/US07/078435, International Search Authority, European Patent Office—Feb. 7, 2008.
(Continued)

Primary Examiner — Hai V Nguyen
(74) *Attorney, Agent, or Firm* — James K. O'Hare

(57) **ABSTRACT**

Methods and apparatus related to the sharing of wide area network (WAN) uplink bandwidth with peer to peer communication signaling usage are described. A base station transmits a signal to be used by a peer to peer wireless terminal in controlling its peer to peer transmit power level. The peer to peer wireless terminal receives and measures the strength of the base station signal. The measurement information is used in determining whether or not peer to peer signal transmission is permitted and/or in determining a peer to peer transmission power level. Current service level information and/or encoded information, e.g., an interference level indicator value, conveyed by the received base station signal are, in various embodiments, also utilized in determining a peer to peer transmission power level.

32 Claims, 29 Drawing Sheets

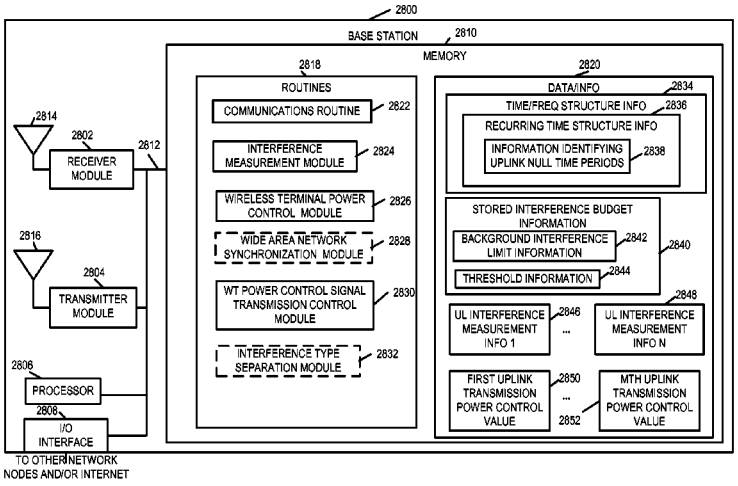

(51) **Int. Cl.**

H04W 52/30	(2009.01)
H04W 52/38	(2009.01)
H04W 52/28	(2009.01)
H04W 52/36	(2009.01)
H04W 76/02	(2009.01)

(52) **U.S. Cl.**

CPC ***H04W52/383*** (2013.01); *H04W 52/281* (2013.01); *H04W 52/367* (2013.01); *H04W 76/025* (2013.01)

(56) **References Cited**

U.S. PATENT DOCUMENTS

5,542,097	A	7/1996	Ward et al.	
5,754,537	A *	5/1998	Jamal	370/330
5,903,618	A	5/1999	Miyake et al.	
6,167,270	A	12/2000	Rezaiifar et al.	
6,175,745	B1	1/2001	Bringby et al.	
6,198,441	B1	3/2001	Okabe et al.	
6,252,865	B1	6/2001	Walton et al.	
6,259,726	B1 *	7/2001	Saadeh et al.	375/222
6,272,340	B1 *	8/2001	Wright et al.	455/427
6,377,608	B1	4/2002	Zyren	
6,415,146	B1	7/2002	Capece	
6,442,397	B1	8/2002	Benveniste	
6,577,670	B1	6/2003	Roberts	
6,580,704	B1	6/2003	Wellig et al.	
6,594,251	B1	7/2003	Raissinia et al.	
6,621,454	B1 *	9/2003	Reudink et al.	342/367
6,658,262	B1	12/2003	Lundborg	
6,675,012	B2	1/2004	Gray	
6,748,246	B1	6/2004	Khullar	
6,754,484	B1	6/2004	Hiltunen et al.	
6,757,522	B1 *	6/2004	Naegeli et al.	455/67.11
6,763,013	B2	7/2004	Kennedy	
6,775,548	B1	8/2004	Rong et al.	
6,807,165	B2	10/2004	Belcea	
6,823,003	B2	11/2004	Laureanti	
6,823,195	B1	11/2004	Boesen	
6,834,045	B1	12/2004	Lappetelainen et al.	
6,836,663	B1	12/2004	Kotzin	
6,836,666	B2 *	12/2004	Gopalakrishnan et al.	455/452.2
6,842,433	B2	1/2005	West et al.	
6,843,597	B1	1/2005	Li et al.	
6,859,488	B2 *	2/2005	Azenkot et al.	375/147
6,882,851	B2	4/2005	Sugar et al.	
6,898,437	B1 *	5/2005	Larsen et al.	455/522
6,909,706	B2	6/2005	Wilmer et al.	
6,914,894	B2	7/2005	Wilmer et al.	
6,920,311	B2	7/2005	Rofougaran et al.	
6,937,641	B2	8/2005	Li et al.	
6,983,166	B2 *	1/2006	Shiu et al.	455/522
6,987,966	B1	1/2006	Wu et al.	
7,003,283	B2	2/2006	Hiltunen et al.	
7,006,799	B2	2/2006	Wiemeyer et al.	
7,013,143	B2 *	3/2006	Love et al.	455/450
7,016,673	B2	3/2006	Reddy et al.	
7,020,442	B2	3/2006	Najafi et al.	
7,050,405	B2 *	5/2006	Attar et al.	370/282
7,099,296	B2	8/2006	Belcea	
7,133,391	B2	11/2006	Belcea	
7,151,795	B1	12/2006	Goldburg	
7,155,161	B2	12/2006	Regulinski et al.	
7,158,484	B1	1/2007	Ahmed et al.	
7,173,923	B2 *	2/2007	Beach	370/338
7,181,178	B2	2/2007	Chow	
7,190,700	B2 *	3/2007	Choi	370/468
7,203,472	B2	4/2007	Seppinen et al.	
7,212,504	B2	5/2007	Belcea	
7,248,570	B2	7/2007	Bahl et al.	
7,248,841	B2 *	7/2007	Agee et al.	455/101
7,286,841	B2 *	10/2007	Sun et al.	455/502
7,313,124	B2 *	12/2007	Lim et al.	370/342
7,333,813	B2 *	2/2008	Ganti et al.	455/452.1
7,359,733	B2 *	4/2008	Liang et al.	455/562.1
7,366,135	B2 *	4/2008	Konishi et al.	370/329
7,376,438	B2 *	5/2008	Shiu et al.	455/522
7,386,043	B2	6/2008	Goldburg	
7,388,845	B2 *	6/2008	Laroia et al.	370/311
7,389,088	B2 *	6/2008	Kim	455/41.1
7,447,174	B2	11/2008	Joshi	
7,450,950	B2 *	11/2008	Kim et al.	455/453
7,463,644	B2 *	12/2008	Zhu et al.	370/445
7,489,905	B2	2/2009	Qi et al.	
7,492,743	B2	2/2009	Uhlik	
7,508,778	B2	3/2009	Yafuso	
7,522,919	B2 *	4/2009	Yoon et al.	455/428
7,539,507	B2	5/2009	Grob et al.	
7,548,758	B2	6/2009	Periyalwar et al.	
7,567,791	B2	7/2009	Laroia et al.	
7,573,865	B2	8/2009	Shvodian	
7,620,415	B2	11/2009	Ashkenazi et al.	
7,634,234	B2	12/2009	Karabinis	
7,684,813	B2 *	3/2010	Benson et al.	455/517
7,706,824	B2	4/2010	Schulist et al.	
7,734,292	B2 *	6/2010	Cho et al.	455/436
7,751,827	B2	7/2010	Poykko et al.	
7,761,106	B2 *	7/2010	Konchitsky	455/501
7,787,408	B2	8/2010	Proctor, Jr. et al.	
7,953,417	B2	5/2011	Laroia et al.	
7,974,633	B2	7/2011	Kennedy et al.	
8,000,379	B2 *	8/2011	Kishigami et al.	375/148
8,014,359	B2	9/2011	Cave et al.	
8,060,129	B2	11/2011	Grob et al.	
8,140,012	B1	3/2012	Causey et al.	
8,140,066	B2 *	3/2012	Kneckt	455/422.1
8,249,638	B2 *	8/2012	Lor	455/518
8,260,197	B2 *	9/2012	Okada	455/18
8,265,620	B2 *	9/2012	Hong et al.	455/424
8,325,836	B2 *	12/2012	Tong et al.	375/260
8,369,800	B2 *	2/2013	Li et al.	455/91
8,374,259	B2 *	2/2013	Yamasuge	375/260
8,385,320	B2 *	2/2013	Cai et al.	370/350
8,391,272	B2 *	3/2013	Cai et al.	370/350
8,417,205	B2 *	4/2013	Tang et al.	455/272
RE44,237	E *	5/2013	McHenry	455/454
8,452,317	B2 *	5/2013	Li et al.	455/522
8,521,158	B2 *	8/2013	Karpoor et al.	455/432.1
8,521,194	B2 *	8/2013	Laroia et al.	455/458
8,543,065	B2 *	9/2013	Karpoor et al.	455/67.11
8,588,836	B2 *	11/2013	Periyalwar et al.	455/517
8,630,243	B2 *	1/2014	Matsuzawa	370/329
8,634,869	B2 *	1/2014	Li et al.	455/552.1
8,699,474	B2 *	4/2014	Beach	370/338
8,929,281	B2 *	1/2015	Li et al.	370/328
2001/0016499	A1	8/2001	Hamabe	
2002/0061768	A1 *	5/2002	Liang et al.	455/561
2002/0065094	A1	5/2002	Schmutz et al.	
2002/0173277	A1	11/2002	Takao et al.	
2002/0193130	A1 *	12/2002	Yang et al.	455/501
2003/0053437	A1	3/2003	Bahl et al.	
2003/0076168	A1	4/2003	Forrester	
2003/0103470	A1	6/2003	Yafuso	
2003/0144003	A1	7/2003	Ranta et al.	
2003/0176193	A1 *	9/2003	Konishi et al.	455/454
2003/0185285	A1 *	10/2003	Talwar	375/148
2004/0023627	A1	2/2004	Osaki et al.	
2004/0095902	A1	5/2004	Laroia et al.	
2004/0125965	A1 *	7/2004	Alberth et al.	381/77
2004/0127214	A1	7/2004	Reddy et al.	
2004/0242258	A1 *	12/2004	Kim	455/522
2005/0013283	A1 *	1/2005	Yoon et al.	370/350
2005/0025315	A1	2/2005	Kreitzer	
2005/0093624	A1	5/2005	Forrester et al.	
2005/0111383	A1	5/2005	Grob et al.	
2005/0129051	A1 *	6/2005	Zhu et al.	370/445
2005/0143119	A1	6/2005	Chandra et al.	
2005/0215196	A1	9/2005	Krishnan et al.	
2005/0239451	A1	10/2005	Periyalwar et al.	
2006/0023629	A1	2/2006	Kim et al.	
2006/0063484	A1	3/2006	Proctor, Jr. et al.	
2006/0135070	A1	6/2006	Karabinis	

(56) **References Cited**

U.S. PATENT DOCUMENTS

2006/0148516	A1	7/2006	Reddy et al.	
2006/0153105	A1*	7/2006	Jia et al.	370/278
2006/0168343	A1	7/2006	Ma et al.	
2006/0176815	A1*	8/2006	Picot et al.	370/235
2006/0178148	A1	8/2006	Du et al.	
2006/0229092	A1*	10/2006	Jia et al.	455/517
2006/0245398	A1*	11/2006	Li et al.	370/335
2006/0258382	A1*	11/2006	Zhang et al.	455/501
2006/0258383	A1*	11/2006	Jiang et al.	455/502
2006/0274667	A1*	12/2006	Mir et al.	370/252
2007/0004374	A1*	1/2007	Kneckt	455/343.1
2007/0011171	A1	1/2007	Nurminen et al.	
2007/0053418	A1	3/2007	Goldburg	
2007/0077884	A1	4/2007	Regulinski et al.	
2007/0104128	A1	5/2007	Laroia et al.	
2007/0109993	A1*	5/2007	Beach	370/328
2007/0177561	A1*	8/2007	Beach	370/338
2007/0195731	A1*	8/2007	Camp, Jr.	370/329
2007/0213087	A1	9/2007	Laroia et al.	
2007/0233832	A1	10/2007	Narayanan et al.	
2007/0237217	A1*	10/2007	Shen et al.	375/227
2007/0275696	A1	11/2007	Cheng et al.	
2007/0286171	A1	12/2007	Guan	
2008/0002658	A1	1/2008	Soliman	
2008/0013497	A1	1/2008	Belcea	
2008/0013500	A1*	1/2008	Laroia et al.	370/338
2008/0019333	A1	1/2008	Kharia et al.	
2008/0045235	A1	2/2008	Kennedy et al.	
2008/0055068	A1	3/2008	Van Wageningen et al.	
2008/0069033	A1*	3/2008	Li et al.	370/328
2008/0069039	A1*	3/2008	Li et al.	370/329
2008/0069062	A1*	3/2008	Li et al.	370/338
2008/0069063	A1*	3/2008	Li et al.	370/338
2008/0181058	A1*	7/2008	Hayakawa	367/125
2008/0318612	A1	12/2008	Axnas et al.	
2009/0046573	A1*	2/2009	Damnjanovic	370/216
2009/0052566	A1*	2/2009	Maltsev et al.	375/260
2009/0147834	A1*	6/2009	Kishigami et al.	375/148
2009/0221325	A1	9/2009	Periyalwar et al.	
2009/0296856	A1*	12/2009	Smith et al.	375/320
2010/0067471	A1*	3/2010	Matsuzawa	370/329
2010/0150079	A1*	6/2010	Maltsev et al.	370/329
2010/0202327	A1*	8/2010	Mushkin et al.	370/280
2010/0234071	A1*	9/2010	Shabtay et al.	455/562.1
2011/0045864	A1	2/2011	Chen et al.	
2011/0201374	A1	8/2011	Periyalwar et al.	
2011/0230206	A1	9/2011	Kennedy, Jr. et al.	
2012/0135728	A1*	5/2012	Karpoor et al.	455/432.1
2012/0135777	A1*	5/2012	Karpoor et al.	455/522
2012/0238268	A1*	9/2012	Radulescu et al.	455/435.1
2013/0010808	A1*	1/2013	Ma et al.	370/474
2013/0122947	A1*	5/2013	Li et al.	455/501
2013/0178221	A1*	7/2013	Jung et al.	455/450

FOREIGN PATENT DOCUMENTS

EP	1689207	A2	8/2006
JP	9107583		4/1997
JP	2001238251	A	8/2001
JP	2001358651	A	12/2001
JP	2002112347	A	4/2002
JP	2002290328	A	10/2002
JP	2002325281	A	11/2002
JP	2003087171	A	3/2003
JP	2004023613	A	1/2004
JP	2005236696	A	9/2005
JP	2005260427	A	9/2005
JP	2005341297	A	12/2005
JP	2006501777	A	1/2006
JP	2006191315	A	7/2006
JP	2007512779	A	5/2007
JP	2007527673	A	9/2007
JP	2007531347	A	11/2007
JP	2008517546	A	5/2008
KR	1020094101	A	8/2006
WO	2004030392		4/2004
WO	2005011163	A1	2/2005
WO	2005038606		4/2005
WO	2005053253		6/2005
WO	2005088863		9/2005
WO	2006016331	A1	2/2006
WO	2006043136	A1	4/2006
WO	2006064411	A2	6/2006
WO	2007055623	A1	5/2007
WO	2007082281		7/2007
WO	2008005922		1/2008
WO	2008034044		3/2008

OTHER PUBLICATIONS

International Search Report—PCT/US07/078448, International Search Authority, European Patent Office—Mar. 20, 2008.

International Search Report—PCT/US07/078463, International Search Authority, European Patent Office—Feb. 7, 2008.

International Search Report—PCT/US07/078470, International Search Authority, European Patent Office—Mar. 26, 2008.

Stoica, I. et al.: "Chord: A Scalable Peer-to-peer Lookup Service for Internet Applications", SIGCOMM' 01, Aug. 27-31, 2001, San Diego, CA, USA, pp. 1- 12.

Taiwan Search Report—TW096134622—TIPO—Mar. 4, 2012.

Taiwan Search Report—TW096134644—TIPO—May 6, 2011.

Taiwan Search Report—TW096134620—TIPO—Jul. 22, 2011.

Written Opinion—PCT/US07/078435, International Search Authority, European Patent Office—Feb. 7, 2008.

Written Opinion—PCT/US07/078448, International Search Authority, European Patent Office—Mar. 20, 2008.

Written Opinion—PCT/US07/078463, International Search Authority, European Patent Office—Feb. 7, 2008.

Written Opinion—PCT/US07/078470, International Search Authority, European Patent Office—Mar. 26, 2008.

Ozeki, T., "Realization of Public Network and AD-HOC Network Hybrid System based on TDD-CDMA," IEICE Technical Report, The Institute of Electronics, Information and Communication Engineers, vol. 103, No. 415, pp. 59-64.

* cited by examiner

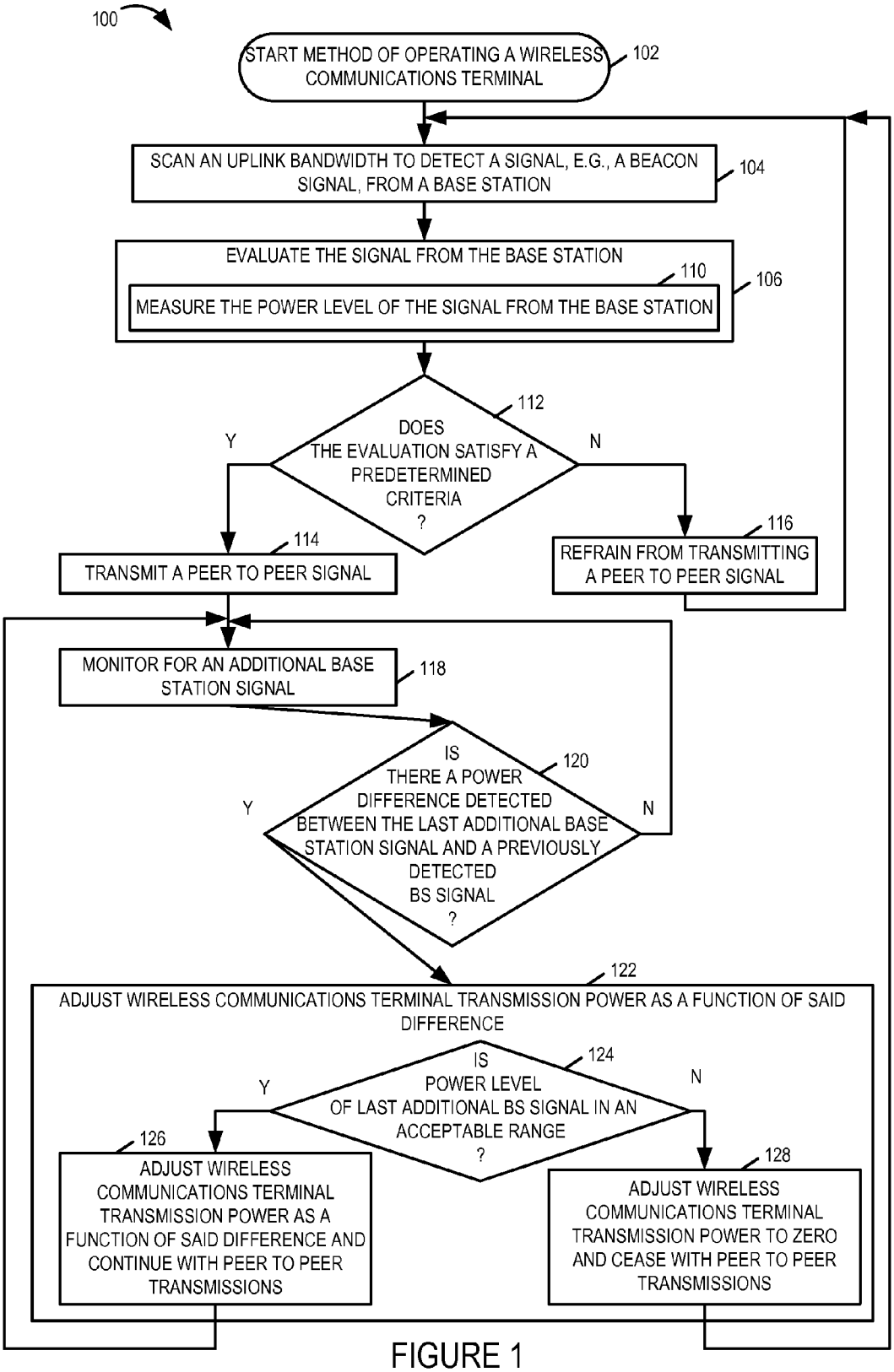
100
START METHOD OF OPERATING A WIRELESS COMMUNICATIONS TERMINAL
102
SCAN AN UPLINK BANDWIDTH TO DETECT A SIGNAL, E.G., A BEACON SIGNAL, FROM A BASE STATION
104
EVALUATE THE SIGNAL FROM THE BASE STATION
110
MEASURE THE POWER LEVEL OF THE SIGNAL FROM THE BASE STATION
106
DOES THE EVALUATION SATISFY A PREDETERMINED CRITERIA ?
112
Y
N
TRANSMIT A PEER TO PEER SIGNAL
114
REFRAIN FROM TRANSMITTING A PEER TO PEER SIGNAL
116
MONITOR FOR AN ADDITIONAL BASE STATION SIGNAL
118
IS THERE A POWER DIFFERENCE DETECTED BETWEEN THE LAST ADDITIONAL BASE STATION SIGNAL AND A PREVIOUSLY DETECTED BS SIGNAL ?
120
Y
N
ADJUST WIRELESS COMMUNICATIONS TERMINAL TRANSMISSION POWER AS A FUNCTION OF SAID DIFFERENCE
122
IS POWER LEVEL OF LAST ADDITIONAL BS SIGNAL IN AN ACCEPTABLE RANGE ?
124
Y
N
ADJUST WIRELESS COMMUNICATIONS TERMINAL TRANSMISSION POWER AS A FUNCTION OF SAID DIFFERENCE AND CONTINUE WITH PEER TO PEER TRANSMISSIONS
126
ADJUST WIRELESS COMMUNICATIONS TERMINAL TRANSMISSION POWER TO ZERO AND CEASE WITH PEER TO PEER TRANSMISSIONS
128

FIGURE 1

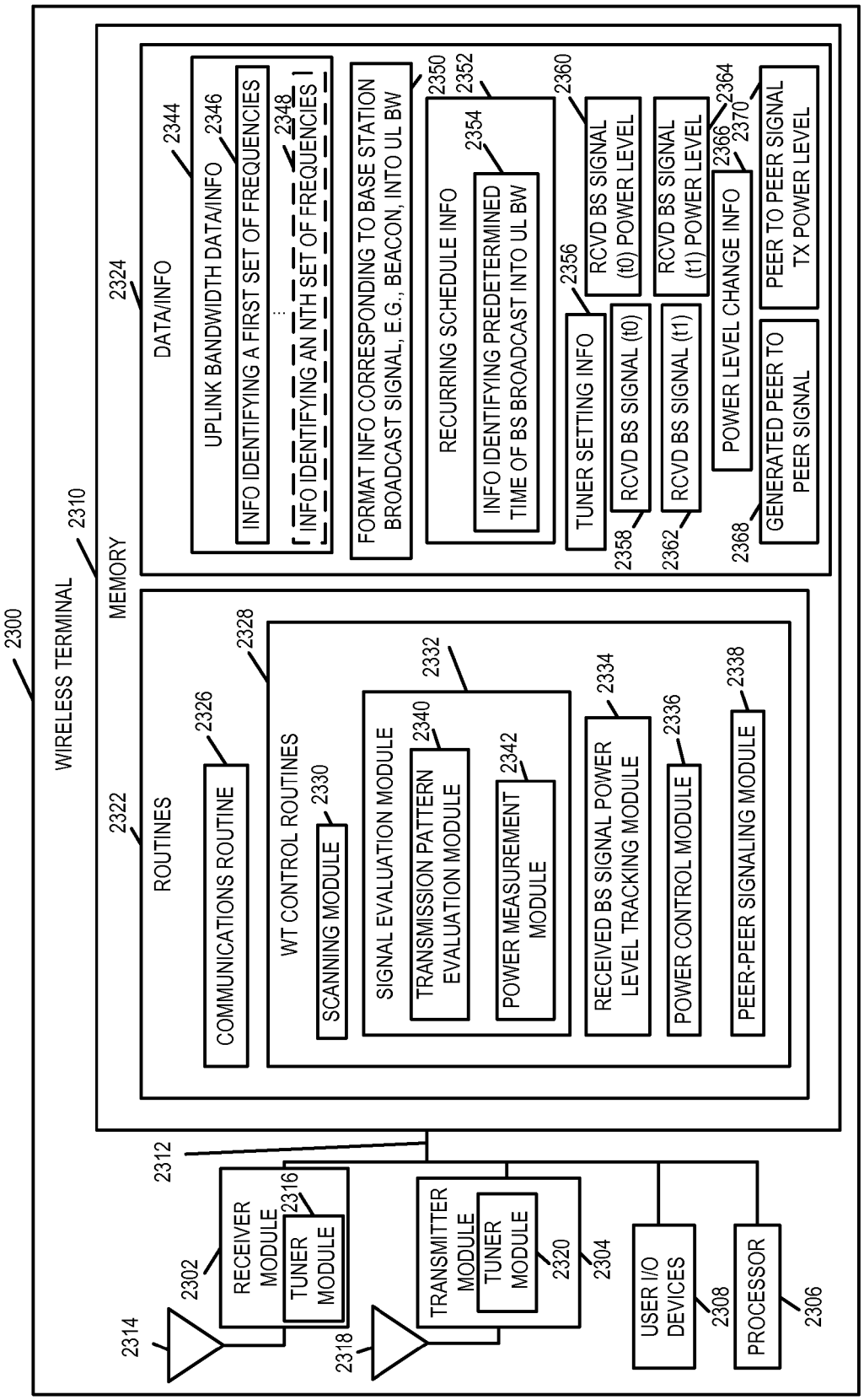
2300
WIRELESS TERMINAL
2310
MEMORY
2324
DATA/INFO
2344
UPLINK BANDWIDTH DATA/INFO
2346
INFO IDENTIFYING A FIRST SET OF FREQUENCIES
2348
INFO IDENTIFYING AN NTH SET OF FREQUENCIES
FORMAT INFO CORRESPONDING TO BASE STATION BROADCAST SIGNAL, E.G., BEACON, INTO UL BW
2350
RECURRING SCHEDULE INFO
2352
INFO IDENTIFYING PREDETERMINED TIME OF BS BROADCAST INTO UL BW
2354
TUNER SETTING INFO
2356
2360
RCVD BS SIGNAL (t0) POWER LEVEL
RCVD BS SIGNAL (t0)
2358
RCVD BS SIGNAL (t1) POWER LEVEL
RCVD BS SIGNAL (t1)
2362
2364
POWER LEVEL CHANGE INFO
2366
2370
GENERATED PEER TO PEER SIGNAL
PEER TO PEER SIGNAL TX POWER LEVEL
2368
ROUTINES
2322
COMMUNICATIONS ROUTINE
2326
WT CONTROL ROUTINES
2328
SCANNING MODULE
2330
SIGNAL EVALUATION MODULE
2332
TRANSMISSION PATTERN EVALUATION MODULE
2340
POWER MEASUREMENT MODULE
2342
RECEIVED BS SIGNAL POWER LEVEL TRACKING MODULE
2334
POWER CONTROL MODULE
2336
PEER-PEER SIGNALING MODULE
2338
2312
RECEIVER MODULE
2302
TUNER MODULE
2316
TRANSMITTER MODULE
2304
TUNER MODULE
2320
USER I/O DEVICES
2308
PROCESSOR
2306
2314
2318

FIGURE 2

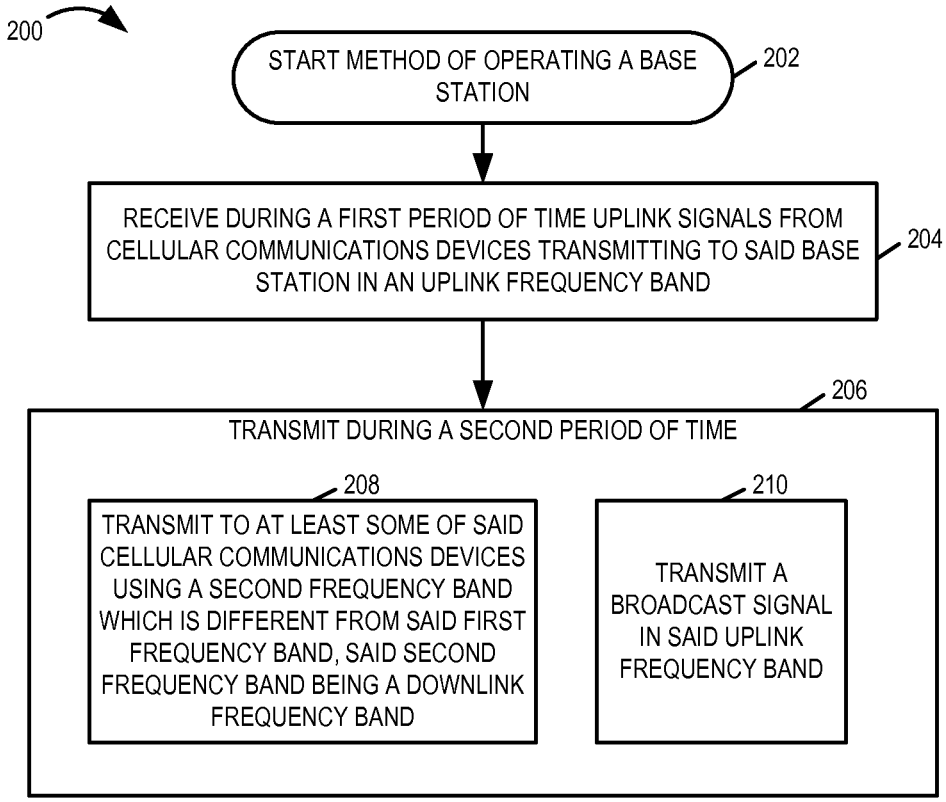
200
START METHOD OF OPERATING A BASE STATION
202
RECEIVE DURING A FIRST PERIOD OF TIME UPLINK SIGNALS FROM CELLULAR COMMUNICATIONS DEVICES TRANSMITTING TO SAID BASE STATION IN AN UPLINK FREQUENCY BAND
204
206
TRANSMIT DURING A SECOND PERIOD OF TIME
208
TRANSMIT TO AT LEAST SOME OF SAID CELLULAR COMMUNICATIONS DEVICES USING A SECOND FREQUENCY BAND WHICH IS DIFFERENT FROM SAID FIRST FREQUENCY BAND, SAID SECOND FREQUENCY BAND BEING A DOWNLINK FREQUENCY BAND
210
TRANSMIT A BROADCAST SIGNAL IN SAID UPLINK FREQUENCY BAND

FIGURE 3

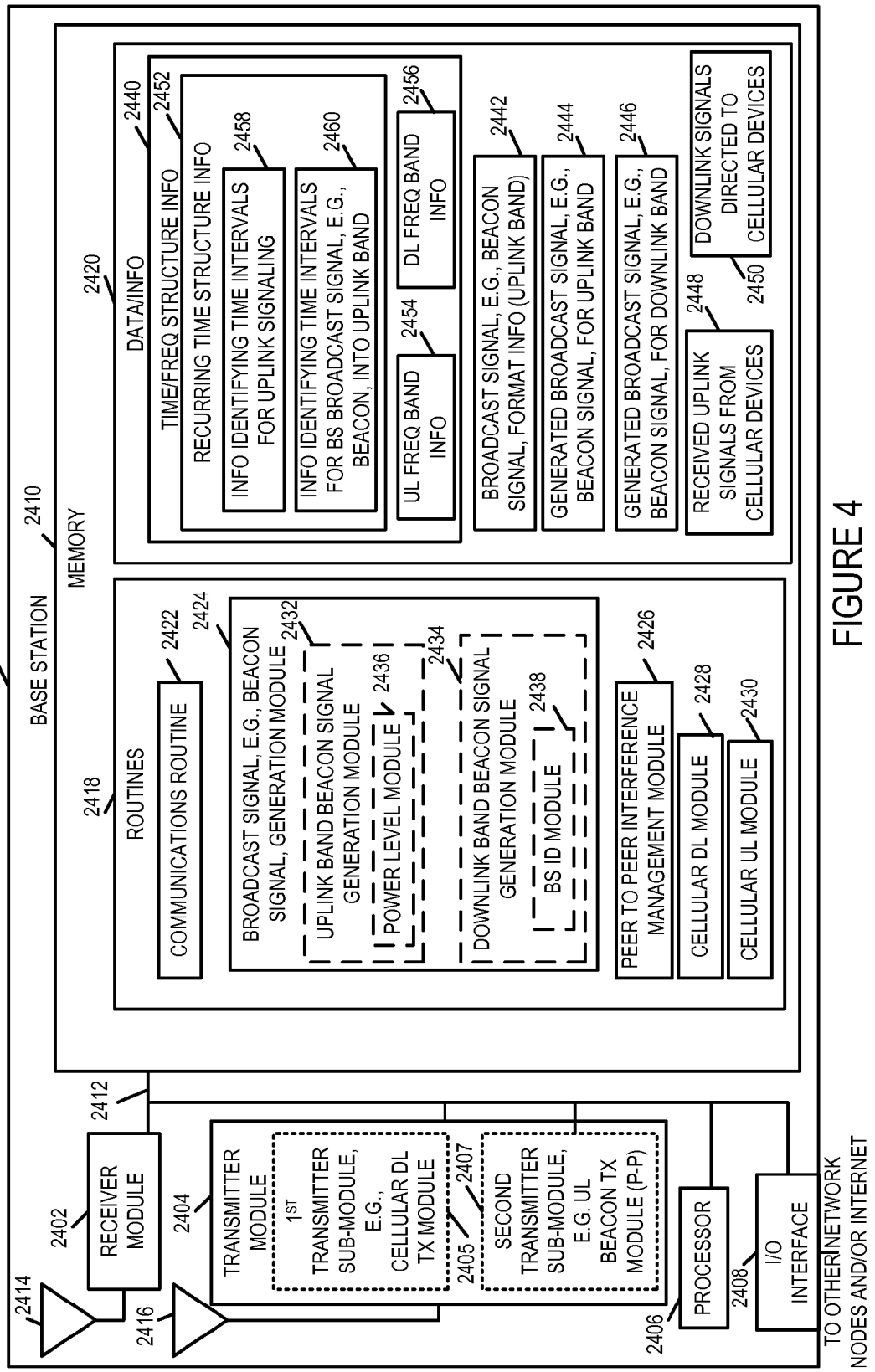
2400
BASE STATION
2410
MEMORY
2420
DATA/INFO
2440
TIME/FREQ STRUCTURE INFO
2452
RECURRING TIME STRUCTURE INFO
2458
INFO IDENTIFYING TIME INTERVALS FOR UPLINK SIGNALING
2460
INFO IDENTIFYING TIME INTERVALS FOR BS BROADCAST SIGNAL, E.G., BEACON, INTO UPLINK BAND
2454
UL FREQ BAND INFO
2456
DL FREQ BAND INFO
2442
BROADCAST SIGNAL, E.G., BEACON SIGNAL, FORMAT INFO (UPLINK BAND)
2444
GENERATED BROADCAST SIGNAL, E.G., BEACON SIGNAL, FOR UPLINK BAND
2446
GENERATED BROADCAST SIGNAL, E.G., BEACON SIGNAL, FOR DOWNLINK BAND
2448
RECEIVED UPLINK SIGNALS FROM CELLULAR DEVICES
2450
DOWNLINK SIGNALS DIRECTED TO CELLULAR DEVICES
2418
ROUTINES
2422
COMMUNICATIONS ROUTINE
2424
BROADCAST SIGNAL, E.G., BEACON SIGNAL, GENERATION MODULE
2432
UPLINK BAND BEACON SIGNAL GENERATION MODULE
2436
POWER LEVEL MODULE
2434
DOWNLINK BAND BEACON SIGNAL GENERATION MODULE
2438
BS ID MODULE
2426
PEER TO PEER INTERFERENCE MANAGEMENT MODULE
2428
CELLULAR DL MODULE
2430
CELLULAR UL MODULE
2412
2402
RECEIVER MODULE
2414
2416
2404
TRANSMITTER MODULE
1ST TRANSMITTER SUB-MODULE, E.G., CELLULAR DL TX MODULE
2405
2407
SECOND TRANSMITTER SUB-MODULE, E.G. UL BEACON TX MODULE (P-P)
2406
PROCESSOR
2408
I/O INTERFACE
TO OTHER NETWORK NODES AND/OR INTERNET

FIGURE 4

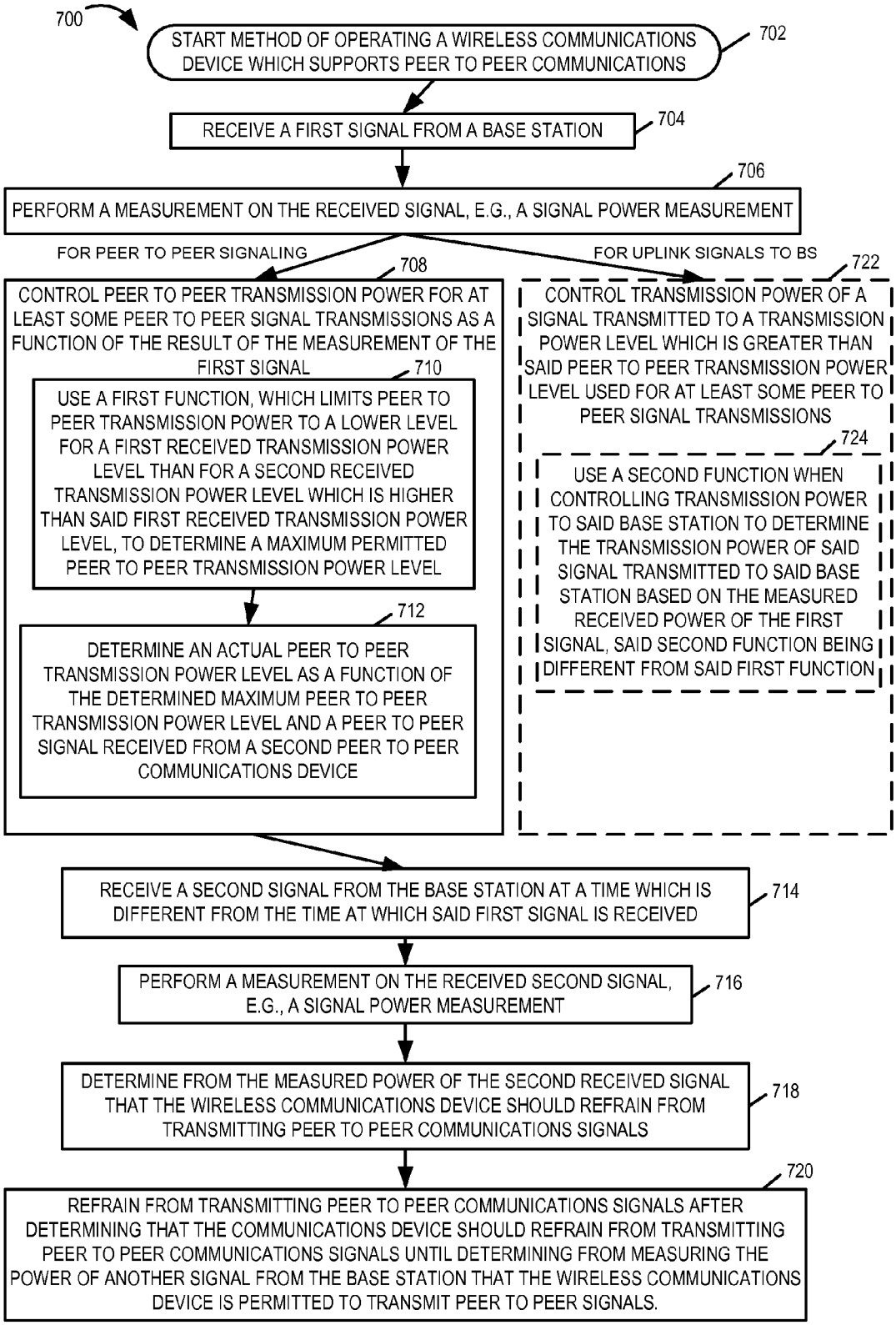
700
START METHOD OF OPERATING A WIRELESS COMMUNICATIONS DEVICE WHICH SUPPORTS PEER TO PEER COMMUNICATIONS
702
RECEIVE A FIRST SIGNAL FROM A BASE STATION
704
PERFORM A MEASUREMENT ON THE RECEIVED SIGNAL, E.G., A SIGNAL POWER MEASUREMENT
706
FOR PEER TO PEER SIGNALING
FOR UPLINK SIGNALS TO BS
708
CONTROL PEER TO PEER TRANSMISSION POWER FOR AT LEAST SOME PEER TO PEER SIGNAL TRANSMISSIONS AS A FUNCTION OF THE RESULT OF THE MEASUREMENT OF THE FIRST SIGNAL
710
USE A FIRST FUNCTION, WHICH LIMITS PEER TO PEER TRANSMISSION POWER TO A LOWER LEVEL FOR A FIRST RECEIVED TRANSMISSION POWER LEVEL THAN FOR A SECOND RECEIVED TRANSMISSION POWER LEVEL WHICH IS HIGHER THAN SAID FIRST RECEIVED TRANSMISSION POWER LEVEL, TO DETERMINE A MAXIMUM PERMITTED PEER TO PEER TRANSMISSION POWER LEVEL
712
DETERMINE AN ACTUAL PEER TO PEER TRANSMISSION POWER LEVEL AS A FUNCTION OF THE DETERMINED MAXIMUM PEER TO PEER TRANSMISSION POWER LEVEL AND A PEER TO PEER SIGNAL RECEIVED FROM A SECOND PEER TO PEER COMMUNICATIONS DEVICE
722
CONTROL TRANSMISSION POWER OF A SIGNAL TRANSMITTED TO A TRANSMISSION POWER LEVEL WHICH IS GREATER THAN SAID PEER TO PEER TRANSMISSION POWER LEVEL USED FOR AT LEAST SOME PEER TO PEER SIGNAL TRANSMISSIONS
724
USE A SECOND FUNCTION WHEN CONTROLLING TRANSMISSION POWER TO SAID BASE STATION TO DETERMINE THE TRANSMISSION POWER OF SAID SIGNAL TRANSMITTED TO SAID BASE STATION BASED ON THE MEASURED RECEIVED POWER OF THE FIRST SIGNAL, SAID SECOND FUNCTION BEING DIFFERENT FROM SAID FIRST FUNCTION
RECEIVE A SECOND SIGNAL FROM THE BASE STATION AT A TIME WHICH IS DIFFERENT FROM THE TIME AT WHICH SAID FIRST SIGNAL IS RECEIVED
714
PERFORM A MEASUREMENT ON THE RECEIVED SECOND SIGNAL, E.G., A SIGNAL POWER MEASUREMENT
716
DETERMINE FROM THE MEASURED POWER OF THE SECOND RECEIVED SIGNAL THAT THE WIRELESS COMMUNICATIONS DEVICE SHOULD REFRAIN FROM TRANSMITTING PEER TO PEER COMMUNICATIONS SIGNALS
718
720
REFRAIN FROM TRANSMITTING PEER TO PEER COMMUNICATIONS SIGNALS AFTER DETERMINING THAT THE COMMUNICATIONS DEVICE SHOULD REFRAIN FROM TRANSMITTING PEER TO PEER COMMUNICATIONS SIGNALS UNTIL DETERMINING FROM MEASURING THE POWER OF ANOTHER SIGNAL FROM THE BASE STATION THAT THE WIRELESS COMMUNICATIONS DEVICE IS PERMITTED TO TRANSMIT PEER TO PEER SIGNALS.

FIGURE 5

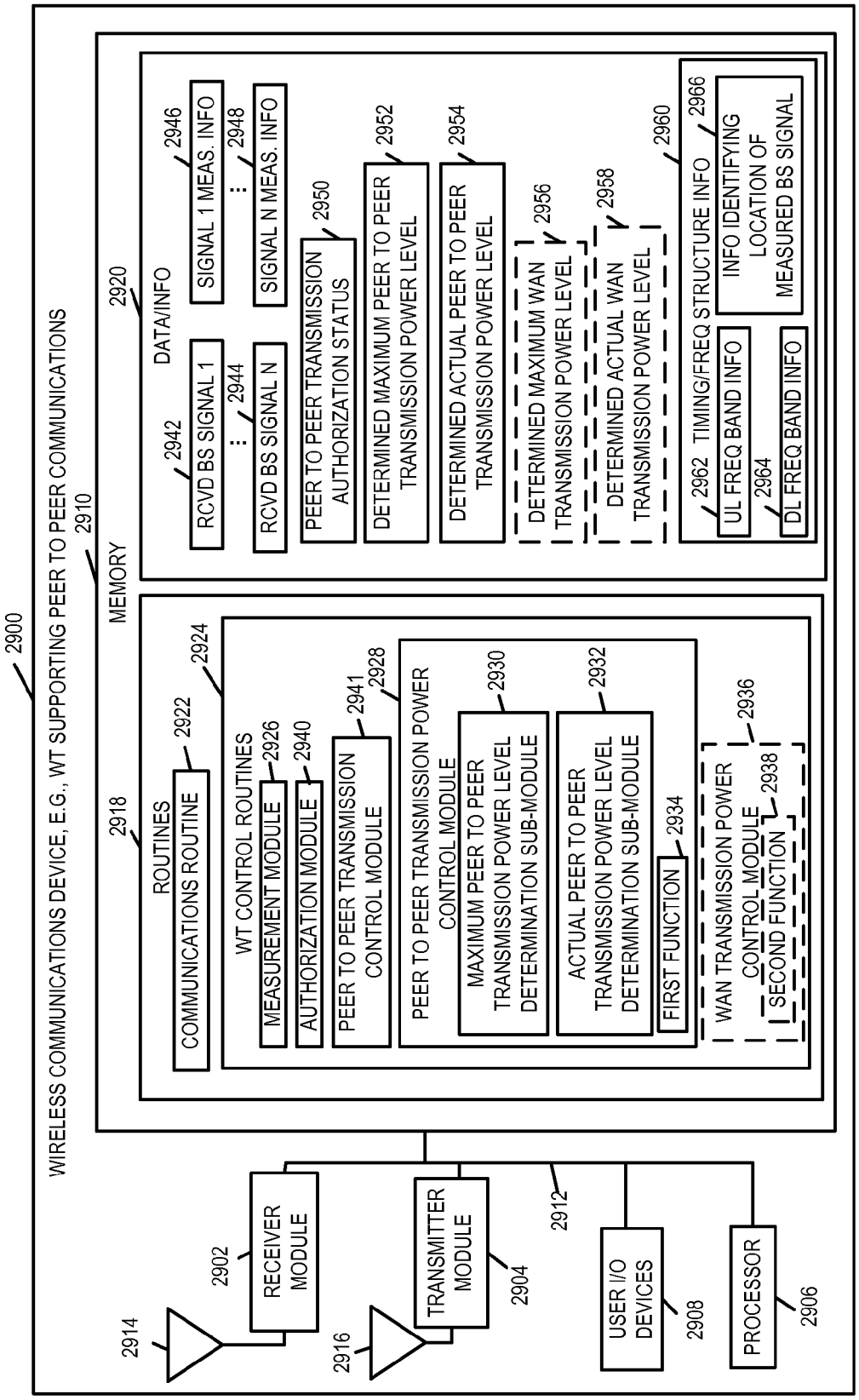
2900
WIRELESS COMMUNICATIONS DEVICE, E.G., WT SUPPORTING PEER TO PEER COMMUNICATIONS
2910
MEMORY
2918
ROUTINES
2922
COMMUNICATIONS ROUTINE
2924
WT CONTROL ROUTINES
2926
MEASUREMENT MODULE
2940
AUTHORIZATION MODULE
2928
PEER TO PEER TRANSMISSION CONTROL MODULE
2941
PEER TO PEER TRANSMISSION POWER CONTROL MODULE
2930
MAXIMUM PEER TO PEER TRANSMISSION POWER LEVEL DETERMINATION SUB-MODULE
2932
ACTUAL PEER TO PEER TRANSMISSION POWER LEVEL DETERMINATION SUB-MODULE
2934
FIRST FUNCTION
2936
WAN TRANSMISSION POWER CONTROL MODULE
2938
SECOND FUNCTION
2920
DATA/INFO
2942
RCVD BS SIGNAL 1
2944
RCVD BS SIGNAL N
2946
SIGNAL 1 MEAS. INFO
2948
SIGNAL N MEAS. INFO
2950
PEER TO PEER TRANSMISSION AUTHORIZATION STATUS
2952
DETERMINED MAXIMUM PEER TO PEER TRANSMISSION POWER LEVEL
2954
DETERMINED ACTUAL PEER TO PEER TRANSMISSION POWER LEVEL
2956
DETERMINED MAXIMUM WAN TRANSMISSION POWER LEVEL
2958
DETERMINED ACTUAL WAN TRANSMISSION POWER LEVEL
2960
2962 TIMING/FREQ STRUCTURE INFO
2966
INFO IDENTIFYING LOCATION OF MEASURED BS SIGNAL
2964
UL FREQ BAND INFO
DL FREQ BAND INFO
2912
2902
RECEIVER MODULE
2914
2904
TRANSMITTER MODULE
2916
2908
USER I/O DEVICES
2906
PROCESSOR

FIGURE 6

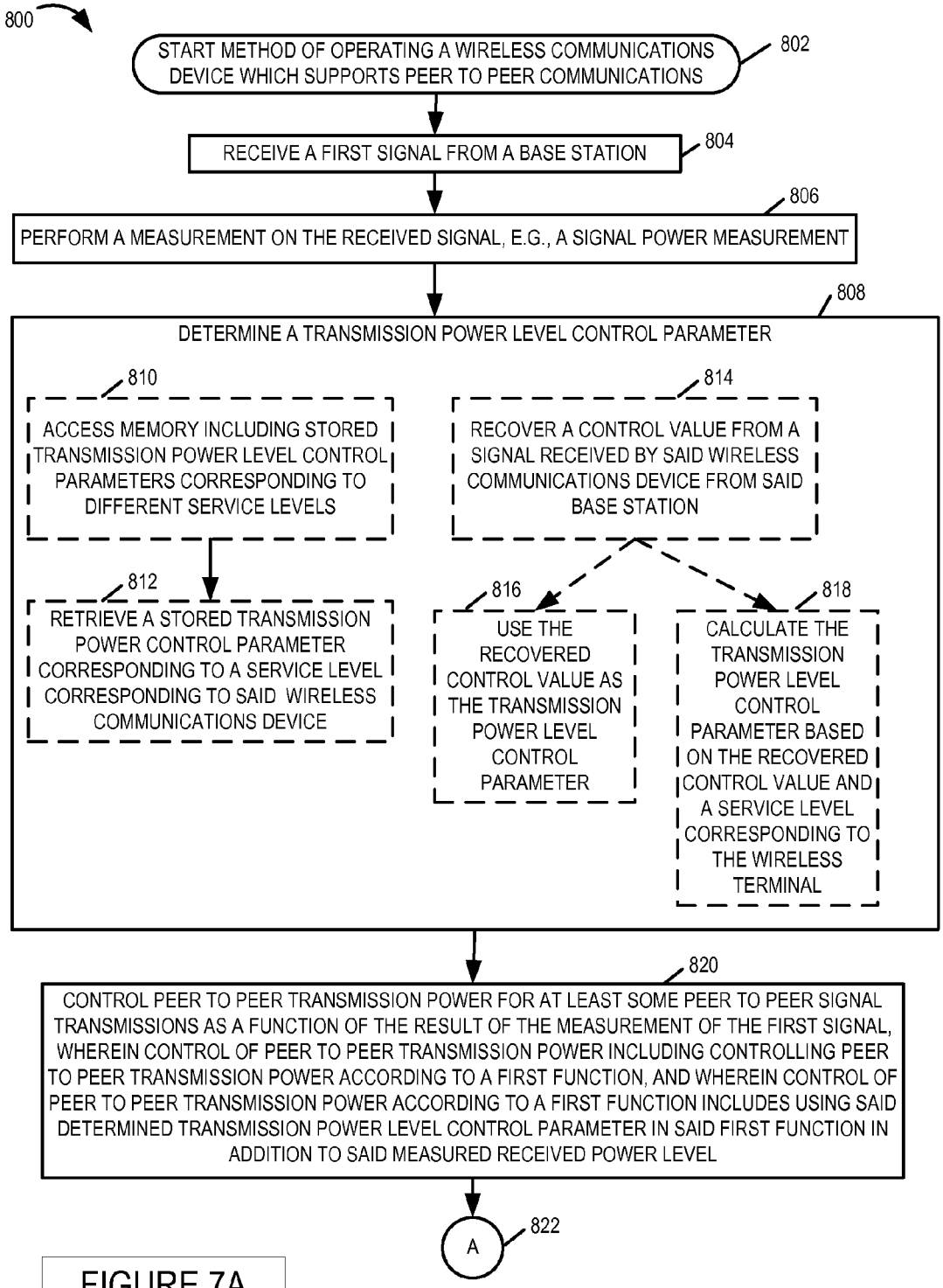

FIGURE 7A

FIGURE 7B

FIGURE 7

FIGURE 7A

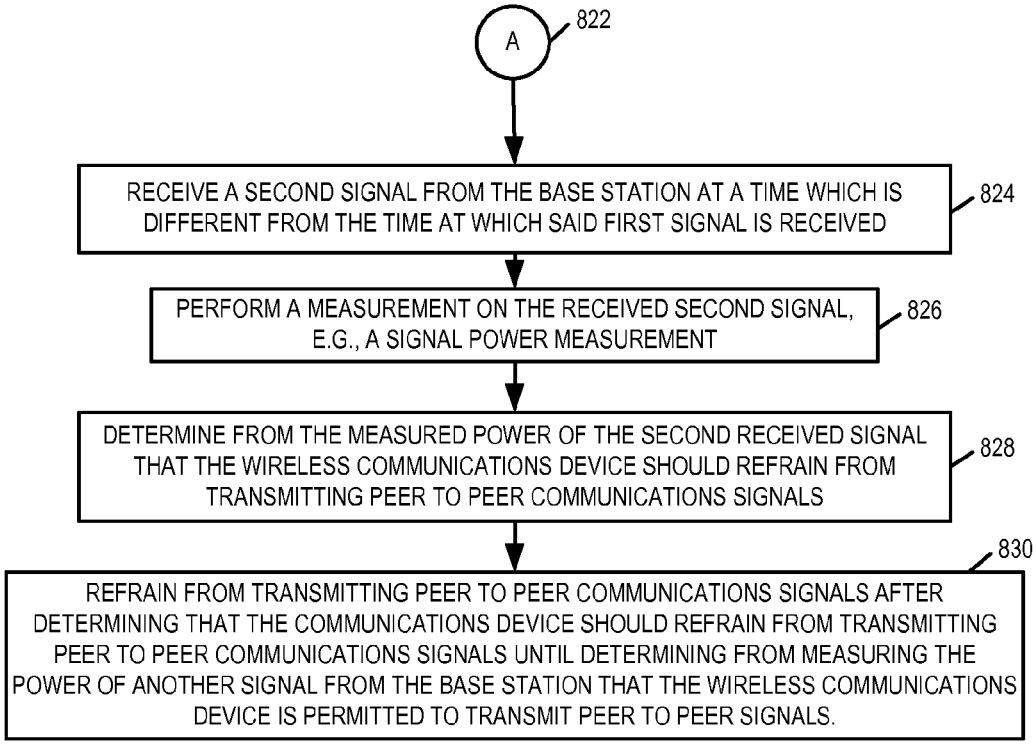
A
822
RECEIVE A SECOND SIGNAL FROM THE BASE STATION AT A TIME WHICH IS DIFFERENT FROM THE TIME AT WHICH SAID FIRST SIGNAL IS RECEIVED
824
PERFORM A MEASUREMENT ON THE RECEIVED SECOND SIGNAL, E.G., A SIGNAL POWER MEASUREMENT
826
DETERMINE FROM THE MEASURED POWER OF THE SECOND RECEIVED SIGNAL THAT THE WIRELESS COMMUNICATIONS DEVICE SHOULD REFRAIN FROM TRANSMITTING PEER TO PEER COMMUNICATIONS SIGNALS
828
830
REFRAIN FROM TRANSMITTING PEER TO PEER COMMUNICATIONS SIGNALS AFTER DETERMINING THAT THE COMMUNICATIONS DEVICE SHOULD REFRAIN FROM TRANSMITTING PEER TO PEER COMMUNICATIONS SIGNALS UNTIL DETERMINING FROM MEASURING THE POWER OF ANOTHER SIGNAL FROM THE BASE STATION THAT THE WIRELESS COMMUNICATIONS DEVICE IS PERMITTED TO TRANSMIT PEER TO PEER SIGNALS.

FIGURE 7B

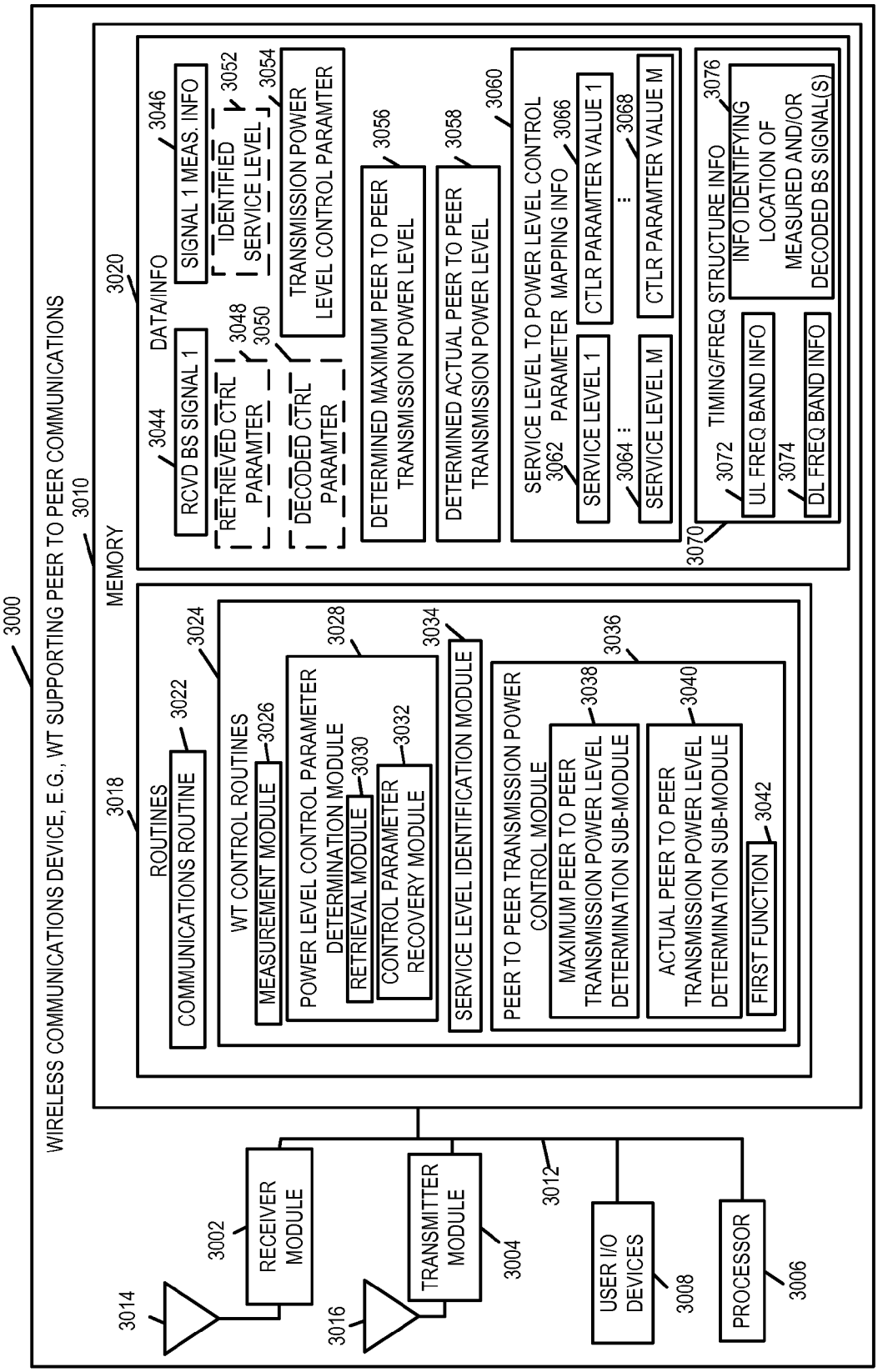
3000
WIRELESS COMMUNICATIONS DEVICE, E.G., WT SUPPORTING PEER TO PEER COMMUNICATIONS
3010
MEMORY
3020
DATA/INFO
3046
SIGNAL 1 MEAS. INFO
3052
IDENTIFIED SERVICE LEVEL
3054
TRANSMISSION POWER LEVEL CONTROL PARAMTER
3044
RCVD BS SIGNAL 1
3048
RETRIEVED CTRL PARAMTER
3050
DECODED CTRL PARAMTER
3056
DETERMINED MAXIMUM PEER TO PEER TRANSMISSION POWER LEVEL
3058
DETERMINED ACTUAL PEER TO PEER TRANSMISSION POWER LEVEL
3060
SERVICE LEVEL TO POWER LEVEL CONTROL PARAMETER MAPPING INFO
3062
SERVICE LEVEL 1
3066
CTLR PARAMTER VALUE 1
3064
SERVICE LEVEL M
3068
CTLR PARAMTER VALUE M
3070
TIMING/FREQ STRUCTURE INFO
3076
INFO IDENTIFYING LOCATION OF MEASURED AND/OR DECODED BS SIGNAL(S)
3072
UL FREQ BAND INFO
3074
DL FREQ BAND INFO
3018
ROUTINES
3022
COMMUNICATIONS ROUTINE
3024
WT CONTROL ROUTINES
3026
MEASUREMENT MODULE
3028
POWER LEVEL CONTROL PARAMETER DETERMINATION MODULE
3030
RETRIEVAL MODULE
3032
CONTROL PARAMETER RECOVERY MODULE
3034
SERVICE LEVEL IDENTIFICATION MODULE
3036
PEER TO PEER TRANSMISSION POWER CONTROL MODULE
3038
MAXIMUM PEER TO PEER TRANSMISSION POWER LEVEL DETERMINATION SUB-MODULE
3040
ACTUAL PEER TO PEER TRANSMISSION POWER LEVEL DETERMINATION SUB-MODULE
3042
FIRST FUNCTION
3012
3002
RECEIVER MODULE
3014
3004
TRANSMITTER MODULE
3016
3008
USER I/O DEVICES
3006
PROCESSOR

FIGURE 8

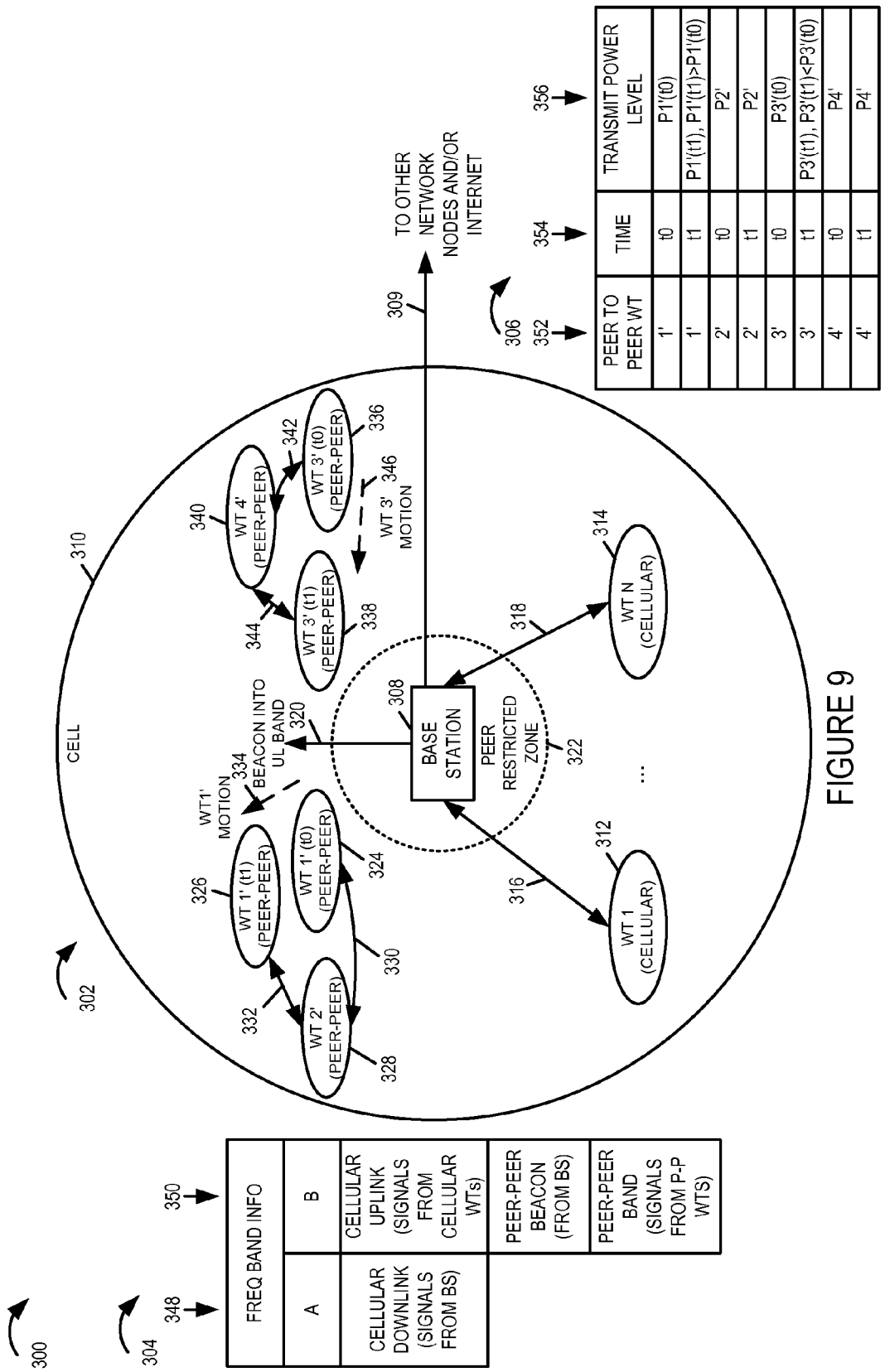
300
304
348
FREQ BAND INFO
A
B
CELLULAR DOWNLINK (SIGNALS FROM BS)
CELLULAR UPLINK (SIGNALS FROM CELLULAR WTs)
PEER-PEER BEACON (FROM BS)
PEER-PEER BAND (SIGNALS FROM P-P WTS)
350
302
CELL
310
WT 1' (t1) (PEER-PEER)
WT 1' (t0) (PEER-PEER)
WT 2' (PEER-PEER)
WT 4' (PEER-PEER)
WT 3' (t0) (PEER-PEER)
WT 3' (t1) (PEER-PEER)
WT 1 (CELLULAR)
WT N (CELLULAR)
WT1' MOTION
WT 3' MOTION
BEACON INTO UL BAND
BASE STATION
PEER RESTRICTED ZONE
TO OTHER NETWORK NODES AND/OR INTERNET
309
306
352
354
356
PEER TO PEER WT
TIME
TRANSMIT POWER LEVEL
1' t0 P1'(t0)
1' t1 P1'(t1), P1'(t1)>P1'(t0)
2' t0 P2'
2' t1 P2'
3' t0 P3'(t0)
3' t1 P3'(t1), P3'(t1)<P3'(t0)
4' t0 P4'
4' t1 P4'

FIGURE 9

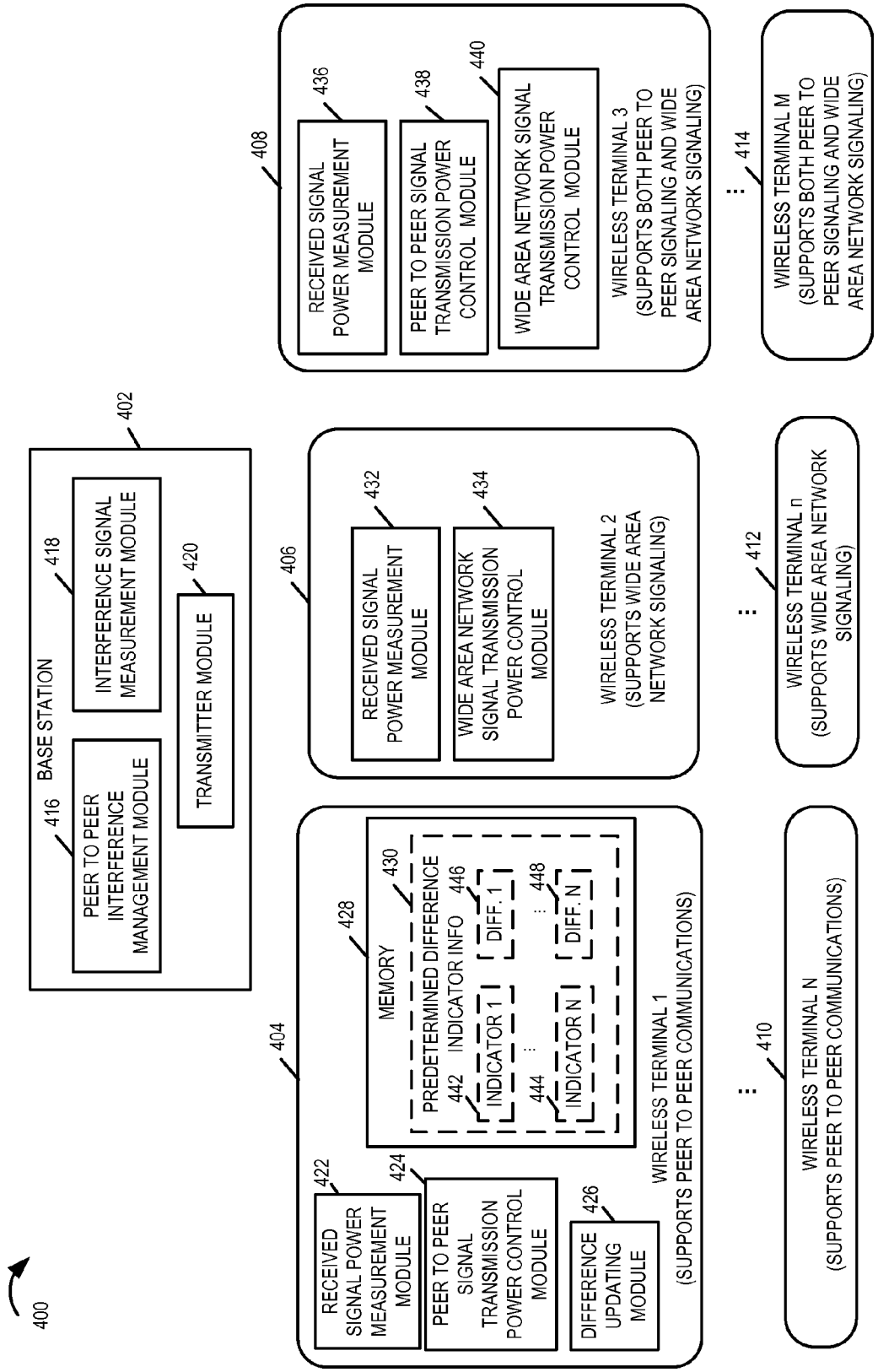
400
BASE STATION
402
PEER TO PEER INTERFERENCE MANAGEMENT MODULE
416
INTERFERENCE SIGNAL MEASUREMENT MODULE
418
TRANSMITTER MODULE
420
WIRELESS TERMINAL 1 (SUPPORTS PEER TO PEER COMMUNICATIONS)
404
RECEIVED SIGNAL POWER MEASUREMENT MODULE
422
PEER TO PEER SIGNAL TRANSMISSION POWER CONTROL MODULE
424
DIFFERENCE UPDATING MODULE
426
MEMORY
428
PREDETERMINED DIFFERENCE INDICATOR INFO
430
INDICATOR 1
442
DIFF. 1
446
INDICATOR N
444
DIFF. N
448
WIRELESS TERMINAL 2 (SUPPORTS WIDE AREA NETWORK SIGNALING)
406
RECEIVED SIGNAL POWER MEASUREMENT MODULE
432
WIDE AREA NETWORK SIGNAL TRANSMISSION POWER CONTROL MODULE
434
WIRELESS TERMINAL 3 (SUPPORTS BOTH PEER TO PEER SIGNALING AND WIDE AREA NETWORK SIGNALING)
408
RECEIVED SIGNAL POWER MEASUREMENT MODULE
436
PEER TO PEER SIGNAL TRANSMISSION POWER CONTROL MODULE
438
WIDE AREA NETWORK SIGNAL TRANSMISSION POWER CONTROL MODULE
440
WIRELESS TERMINAL N (SUPPORTS PEER TO PEER COMMUNICATIONS)
410
WIRELESS TERMINAL n (SUPPORTS WIDE AREA NETWORK SIGNALING)
412
WIRELESS TERMINAL M (SUPPORTS BOTH PEER TO PEER SIGNALING AND WIDE AREA NETWORK SIGNALING)
414

FIGURE 10

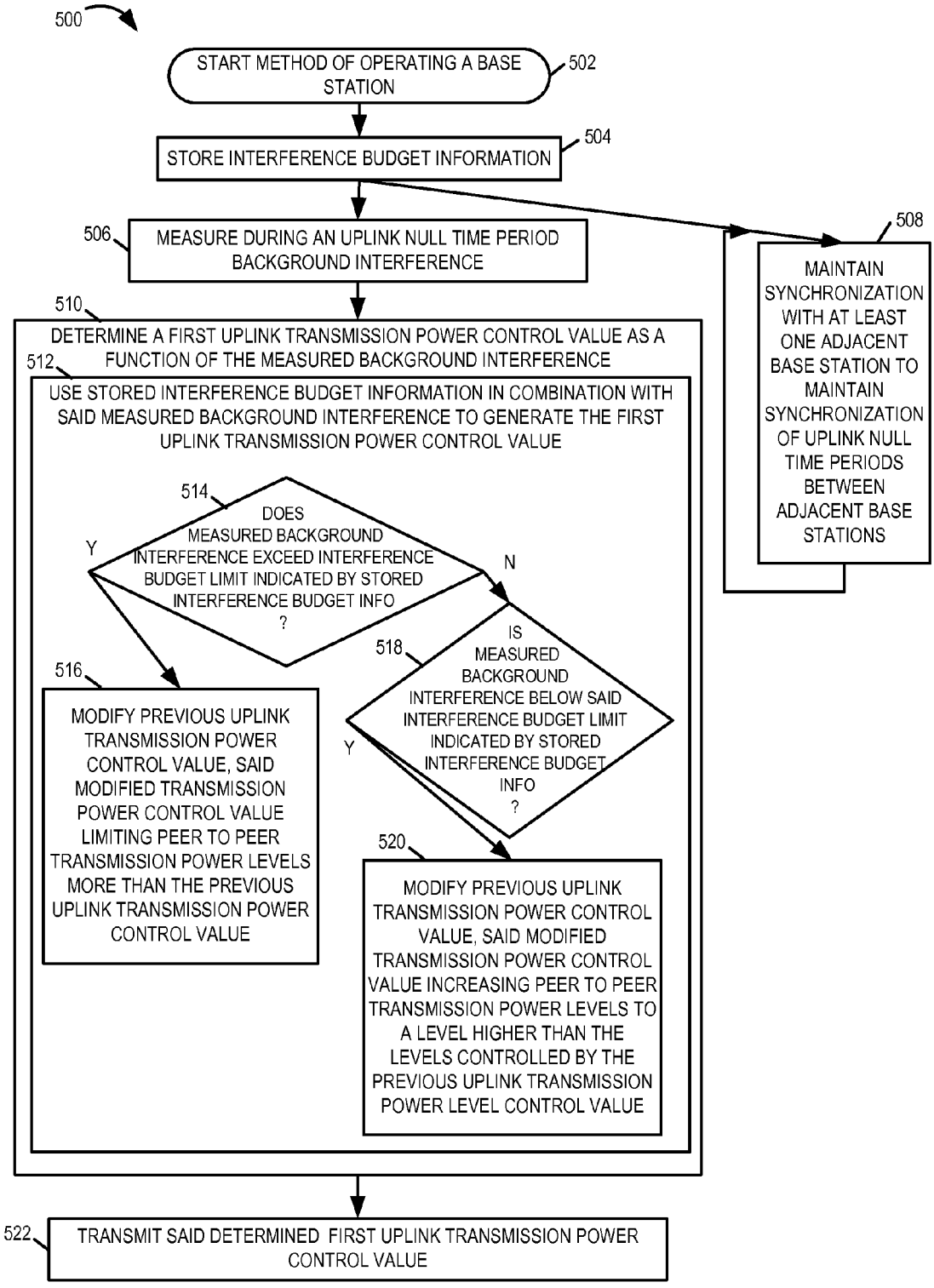
500
START METHOD OF OPERATING A BASE STATION
502
STORE INTERFERENCE BUDGET INFORMATION
504
MEASURE DURING AN UPLINK NULL TIME PERIOD BACKGROUND INTERFERENCE
506
MAINTAIN SYNCHRONIZATION WITH AT LEAST ONE ADJACENT BASE STATION TO MAINTAIN SYNCHRONIZATION OF UPLINK NULL TIME PERIODS BETWEEN ADJACENT BASE STATIONS
508
DETERMINE A FIRST UPLINK TRANSMISSION POWER CONTROL VALUE AS A FUNCTION OF THE MEASURED BACKGROUND INTERFERENCE
510
USE STORED INTERFERENCE BUDGET INFORMATION IN COMBINATION WITH SAID MEASURED BACKGROUND INTERFERENCE TO GENERATE THE FIRST UPLINK TRANSMISSION POWER CONTROL VALUE
512
DOES MEASURED BACKGROUND INTERFERENCE EXCEED INTERFERENCE BUDGET LIMIT INDICATED BY STORED INTERFERENCE BUDGET INFO ?
514
Y
N
MODIFY PREVIOUS UPLINK TRANSMISSION POWER CONTROL VALUE, SAID MODIFIED TRANSMISSION POWER CONTROL VALUE LIMITING PEER TO PEER TRANSMISSION POWER LEVELS MORE THAN THE PREVIOUS UPLINK TRANSMISSION POWER CONTROL VALUE
516
IS MEASURED BACKGROUND INTERFERENCE BELOW SAID INTERFERENCE BUDGET LIMIT INDICATED BY STORED INTERFERENCE BUDGET INFO ?
518
Y
MODIFY PREVIOUS UPLINK TRANSMISSION POWER CONTROL VALUE, SAID MODIFIED TRANSMISSION POWER CONTROL VALUE INCREASING PEER TO PEER TRANSMISSION POWER LEVELS TO A LEVEL HIGHER THAN THE LEVELS CONTROLLED BY THE PREVIOUS UPLINK TRANSMISSION POWER LEVEL CONTROL VALUE
520
TRANSMIT SAID DETERMINED FIRST UPLINK TRANSMISSION POWER CONTROL VALUE
522

FIGURE 11

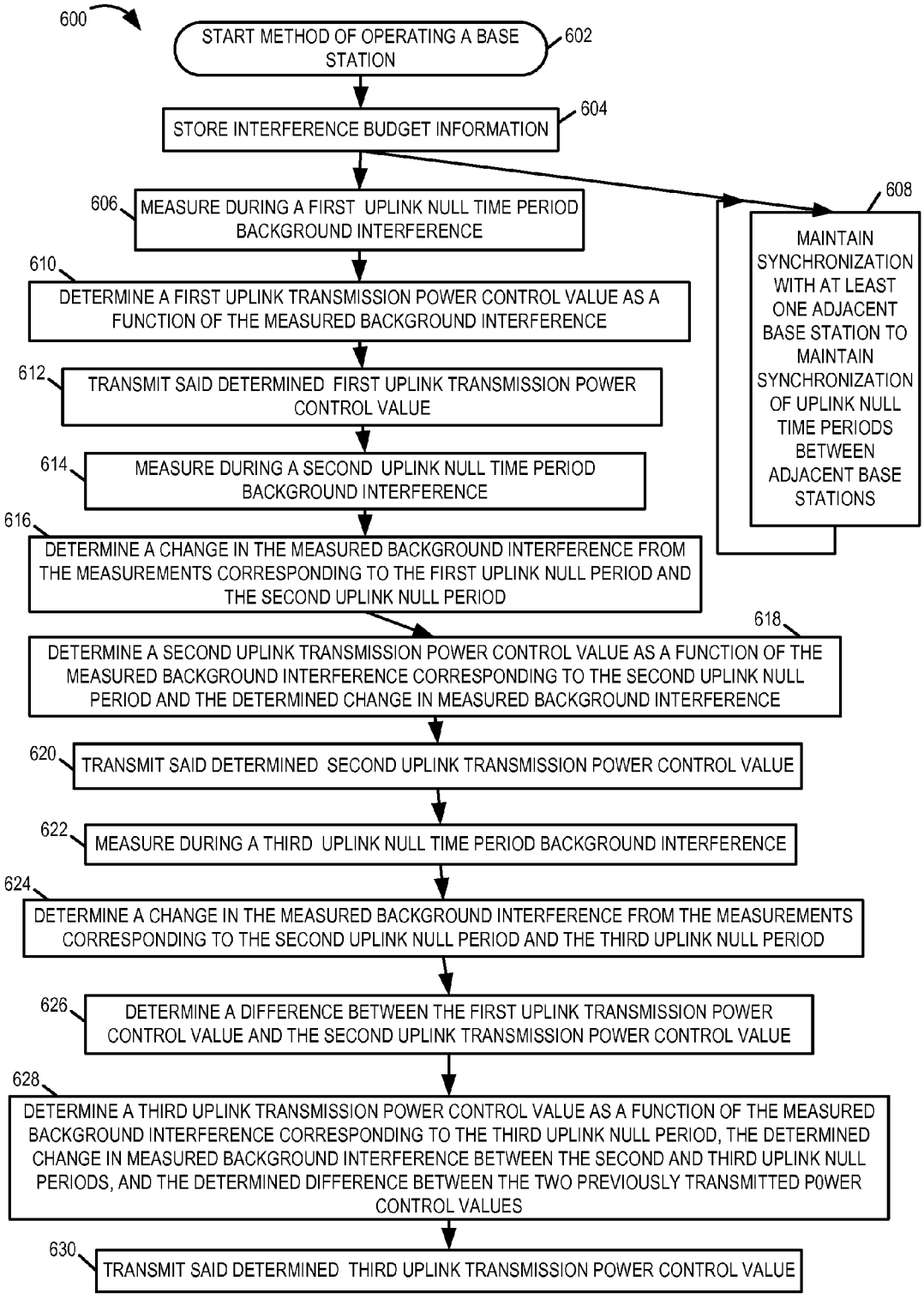
600
START METHOD OF OPERATING A BASE STATION
602
STORE INTERFERENCE BUDGET INFORMATION
604
606
MEASURE DURING A FIRST UPLINK NULL TIME PERIOD BACKGROUND INTERFERENCE
608
MAINTAIN SYNCHRONIZATION WITH AT LEAST ONE ADJACENT BASE STATION TO MAINTAIN SYNCHRONIZATION OF UPLINK NULL TIME PERIODS BETWEEN ADJACENT BASE STATIONS
610
DETERMINE A FIRST UPLINK TRANSMISSION POWER CONTROL VALUE AS A FUNCTION OF THE MEASURED BACKGROUND INTERFERENCE
612
TRANSMIT SAID DETERMINED FIRST UPLINK TRANSMISSION POWER CONTROL VALUE
614
MEASURE DURING A SECOND UPLINK NULL TIME PERIOD BACKGROUND INTERFERENCE
616
DETERMINE A CHANGE IN THE MEASURED BACKGROUND INTERFERENCE FROM THE MEASUREMENTS CORRESPONDING TO THE FIRST UPLINK NULL PERIOD AND THE SECOND UPLINK NULL PERIOD
618
DETERMINE A SECOND UPLINK TRANSMISSION POWER CONTROL VALUE AS A FUNCTION OF THE MEASURED BACKGROUND INTERFERENCE CORRESPONDING TO THE SECOND UPLINK NULL PERIOD AND THE DETERMINED CHANGE IN MEASURED BACKGROUND INTERFERENCE
620
TRANSMIT SAID DETERMINED SECOND UPLINK TRANSMISSION POWER CONTROL VALUE
622
MEASURE DURING A THIRD UPLINK NULL TIME PERIOD BACKGROUND INTERFERENCE
624
DETERMINE A CHANGE IN THE MEASURED BACKGROUND INTERFERENCE FROM THE MEASUREMENTS CORRESPONDING TO THE SECOND UPLINK NULL PERIOD AND THE THIRD UPLINK NULL PERIOD
626
DETERMINE A DIFFERENCE BETWEEN THE FIRST UPLINK TRANSMISSION POWER CONTROL VALUE AND THE SECOND UPLINK TRANSMISSION POWER CONTROL VALUE
628
DETERMINE A THIRD UPLINK TRANSMISSION POWER CONTROL VALUE AS A FUNCTION OF THE MEASURED BACKGROUND INTERFERENCE CORRESPONDING TO THE THIRD UPLINK NULL PERIOD, THE DETERMINED CHANGE IN MEASURED BACKGROUND INTERFERENCE BETWEEN THE SECOND AND THIRD UPLINK NULL PERIODS, AND THE DETERMINED DIFFERENCE BETWEEN THE TWO PREVIOUSLY TRANSMITTED P0WER CONTROL VALUES
630
TRANSMIT SAID DETERMINED THIRD UPLINK TRANSMISSION POWER CONTROL VALUE

FIGURE 12

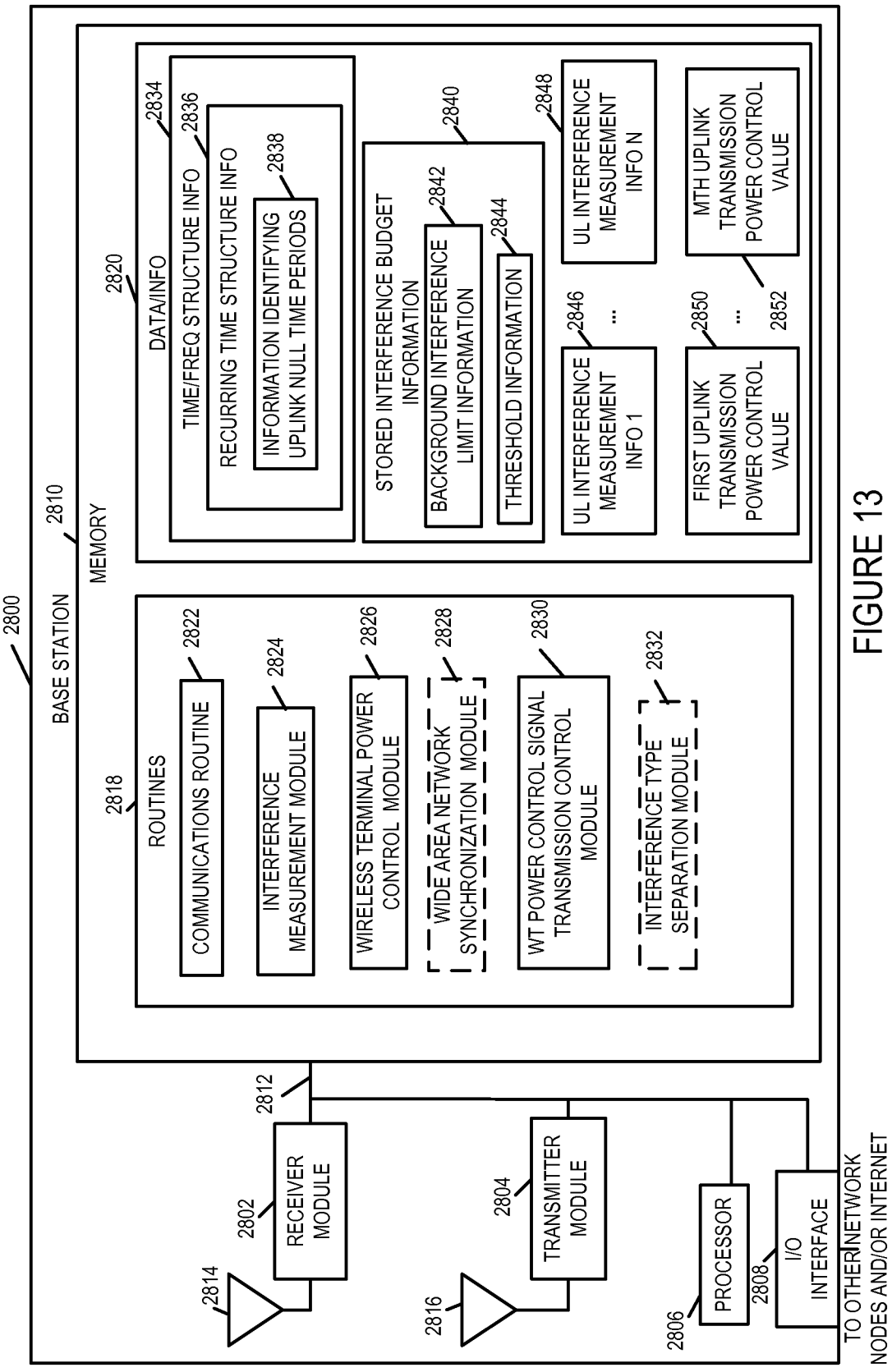
2800
BASE STATION
2810
MEMORY
2818
ROUTINES
COMMUNICATIONS ROUTINE
2822
INTERFERENCE MEASUREMENT MODULE
2824
WIRELESS TERMINAL POWER CONTROL MODULE
2826
WIDE AREA NETWORK SYNCHRONIZATION MODULE
2828
WT POWER CONTROL SIGNAL TRANSMISSION CONTROL MODULE
2830
INTERFERENCE TYPE SEPARATION MODULE
2832
2820
DATA/INFO
TIME/FREQ STRUCTURE INFO
2834
RECURRING TIME STRUCTURE INFO
2836
INFORMATION IDENTIFYING UPLINK NULL TIME PERIODS
2838
STORED INTERFERENCE BUDGET INFORMATION
2840
BACKGROUND INTERFERENCE LIMIT INFORMATION
2842
THRESHOLD INFORMATION
2844
UL INTERFERENCE MEASUREMENT INFO 1
2846
...
UL INTERFERENCE MEASUREMENT INFO N
2848
FIRST UPLINK TRANSMISSION POWER CONTROL VALUE
2850
...
MTH UPLINK TRANSMISSION POWER CONTROL VALUE
2852
2812
RECEIVER MODULE
2802
2814
TRANSMITTER MODULE
2804
2816
PROCESSOR
2806
I/O INTERFACE
2808
TO OTHER NETWORK NODES AND/OR INTERNET

FIGURE 13

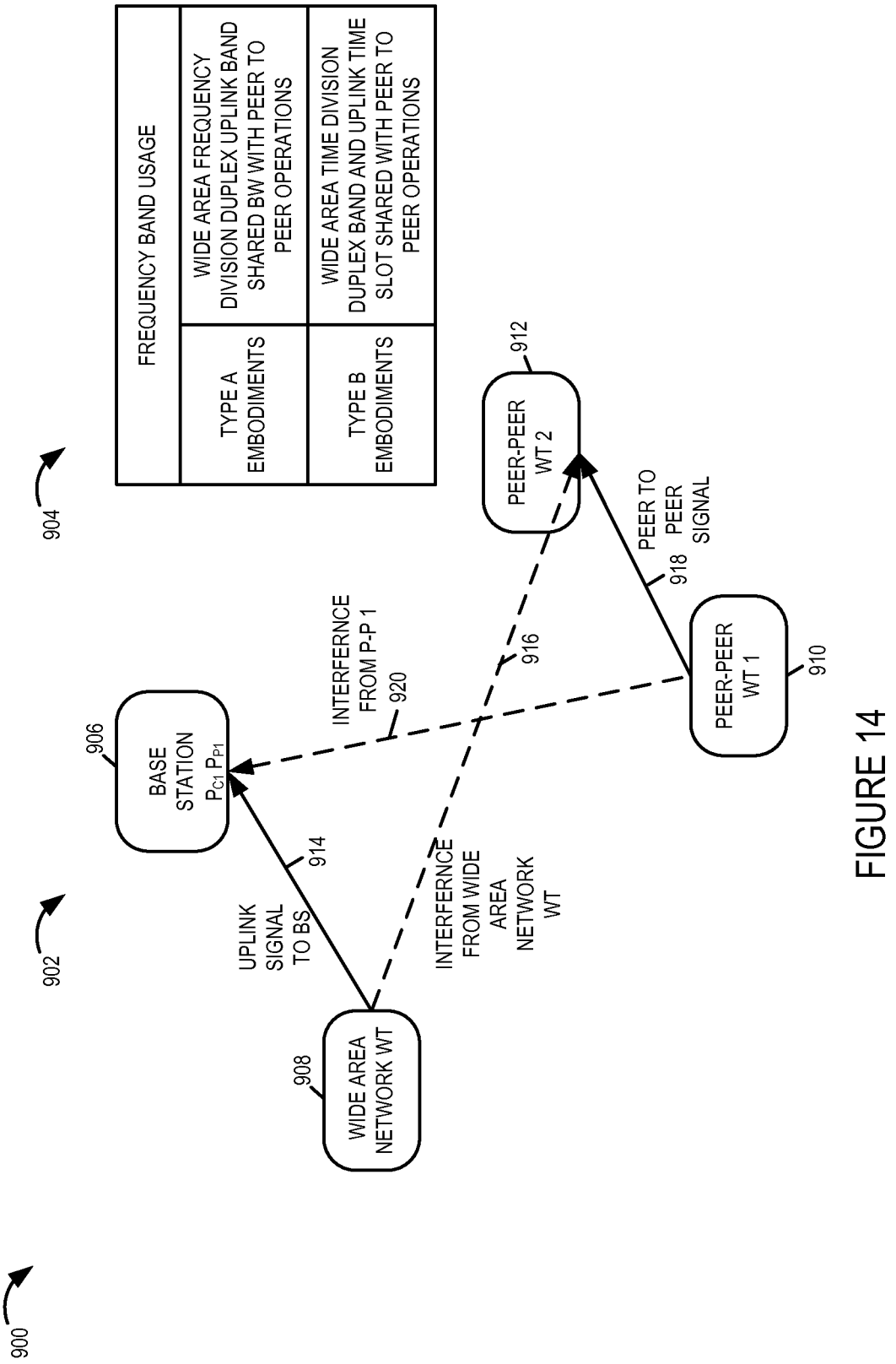
900
902
904
FREQUENCY BAND USAGE
TYPE A EMBODIMENTS
WIDE AREA FREQUENCY DIVISION DUPLEX UPLINK BAND SHARED BW WITH PEER TO PEER OPERATIONS
TYPE B EMBODIMENTS
WIDE AREA TIME DIVISION DUPLEX BAND AND UPLINK TIME SLOT SHARED WITH PEER TO PEER OPERATIONS
BASE STATION P_{C1} P_{P1}
906
WIDE AREA NETWORK WT
908
PEER-PEER WT 2
912
PEER-PEER WT 1
910
UPLINK SIGNAL TO BS
914
PEER TO PEER SIGNAL
918
INTERFERNCE FROM P-P 1
920
INTERFERNCE FROM WIDE AREA NETWORK WT
916

FIGURE 14

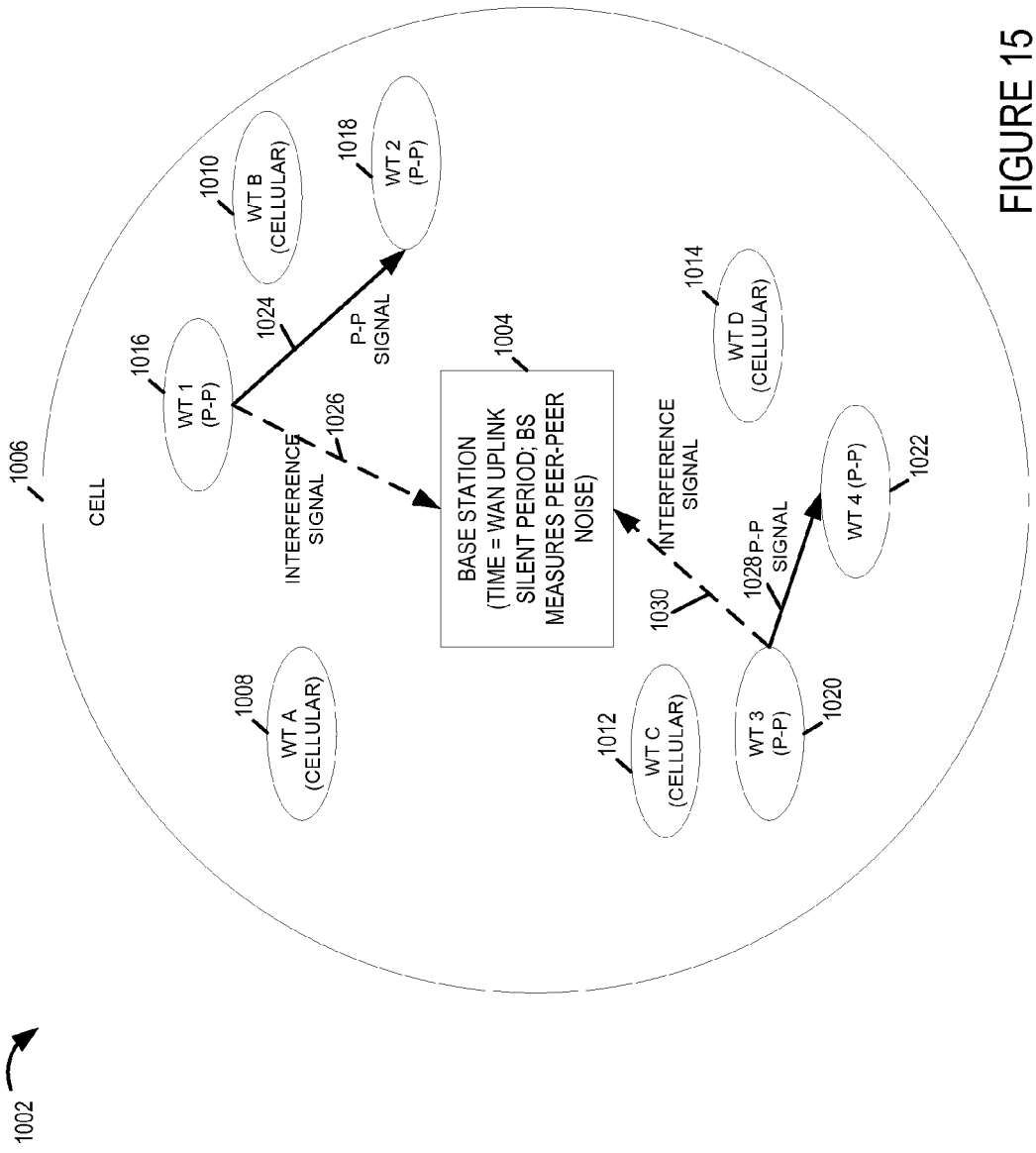
1002
1006
CELL
WT A (CELLULAR)
1008
WT 1 (P-P)
1016
WT B (CELLULAR)
1010
WT C (CELLULAR)
1012
WT D (CELLULAR)
1014
WT 2 (P-P)
1018
WT 3 (P-P)
1020
WT 4 (P-P)
1022
1024
P-P SIGNAL
1026
INTERFERENCE SIGNAL
1028 P-P SIGNAL
1030
INTERFERENCE SIGNAL
1004
BASE STATION (TIME = WAN UPLINK SILENT PERIOD; BS MEASURES PEER-PEER NOISE)

FIGURE 15

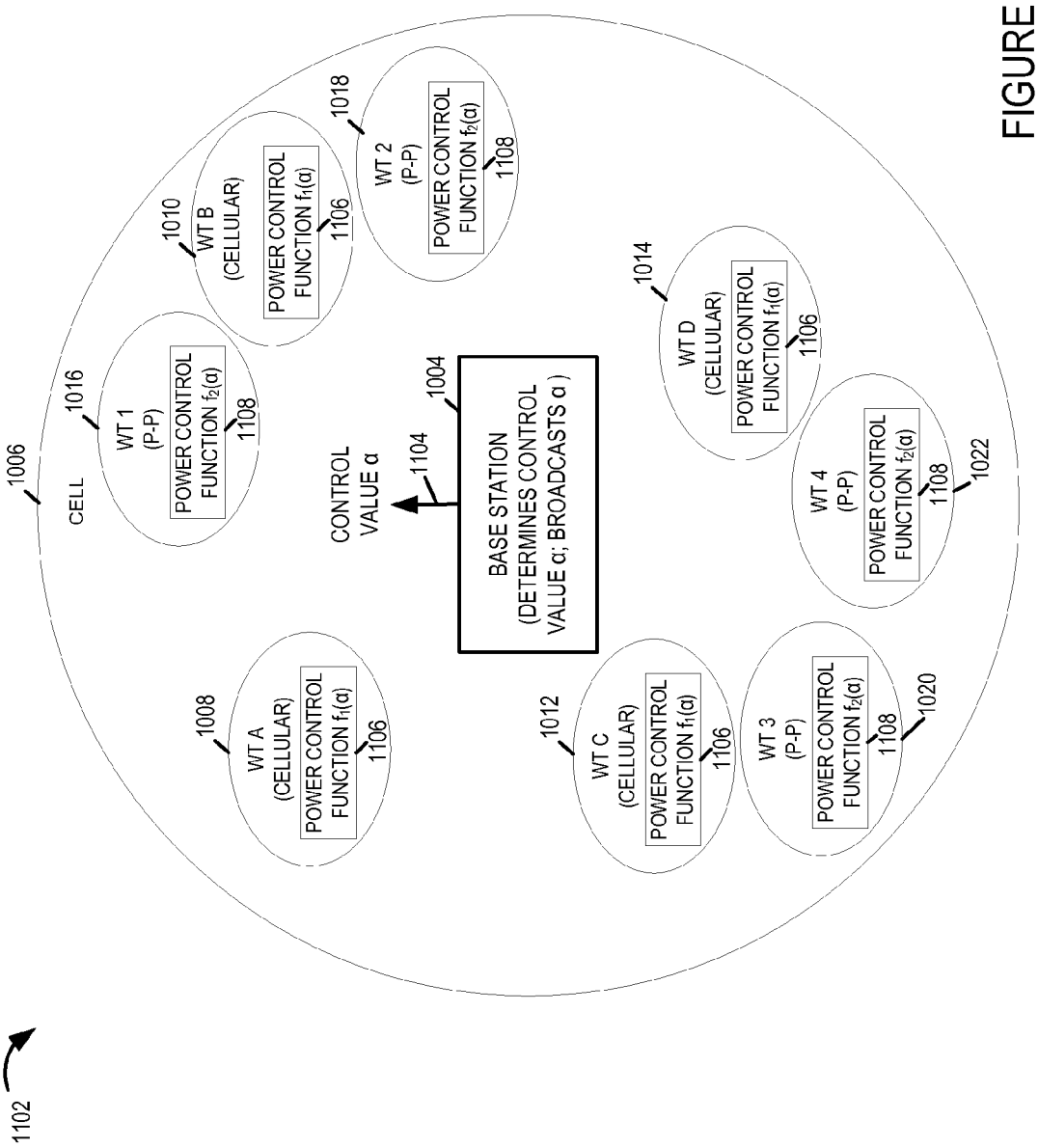
1102
1006
CELL
1016
WT 1
(P-P)
POWER CONTROL
FUNCTION $f_2(\alpha)$
1108
1010
WT B
(CELLULAR)
POWER CONTROL
FUNCTION $f_1(\alpha)$
1106
1018
WT 2
(P-P)
POWER CONTROL
FUNCTION $f_2(\alpha)$
1108
CONTROL
VALUE α
1104
1004
BASE STATION
(DETERMINES CONTROL
VALUE α; BROADCASTS α)
1014
WT D
(CELLULAR)
POWER CONTROL
FUNCTION $f_1(\alpha)$
1106
WT 4
(P-P)
POWER CONTROL
FUNCTION $f_2(\alpha)$
1108
1022
1008
WT A
(CELLULAR)
POWER CONTROL
FUNCTION $f_1(\alpha)$
1106
1012
WT C
(CELLULAR)
POWER CONTROL
FUNCTION $f_1(\alpha)$
1106
WT 3
(P-P)
POWER CONTROL
FUNCTION $f_2(\alpha)$
1108
1020

FIGURE 16

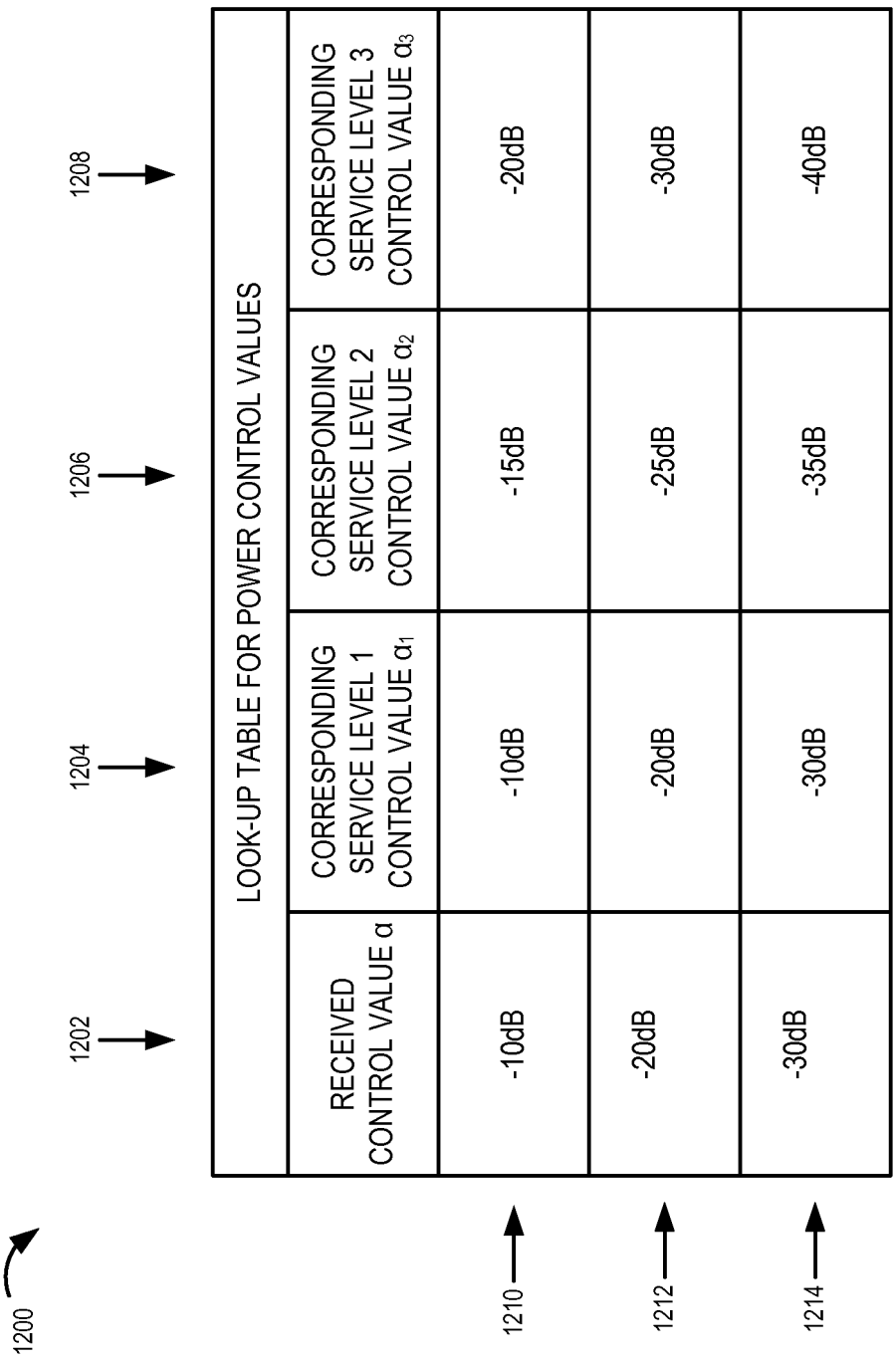
1200
1202
1204
1206
1208
1210
1212
1214
LOOK-UP TABLE FOR POWER CONTROL VALUES
RECEIVED CONTROL VALUE α
CORRESPONDING SERVICE LEVEL 1 CONTROL VALUE α1
CORRESPONDING SERVICE LEVEL 2 CONTROL VALUE α2
CORRESPONDING SERVICE LEVEL 3 CONTROL VALUE α3
-10dB
-10dB
-15dB
-20dB
-20dB
-20dB
-25dB
-30dB
-30dB
-30dB
-35dB
-40dB

FIGURE 17

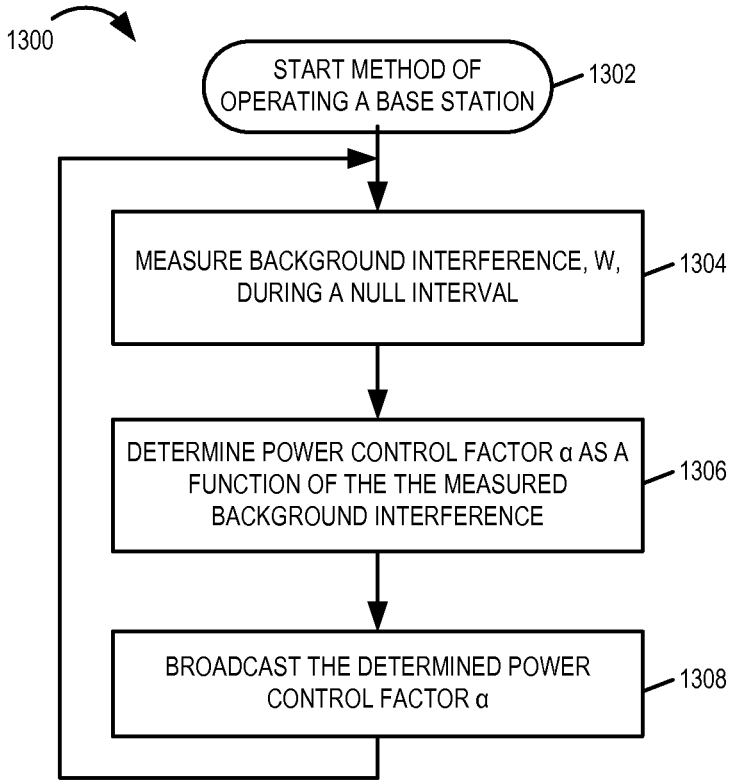
1300
START METHOD OF OPERATING A BASE STATION
1302
MEASURE BACKGROUND INTERFERENCE, W, DURING A NULL INTERVAL
1304
DETERMINE POWER CONTROL FACTOR α AS A FUNCTION OF THE THE MEASURED BACKGROUND INTERFERENCE
1306
BROADCAST THE DETERMINED POWER CONTROL FACTOR α
1308

FIGURE 18

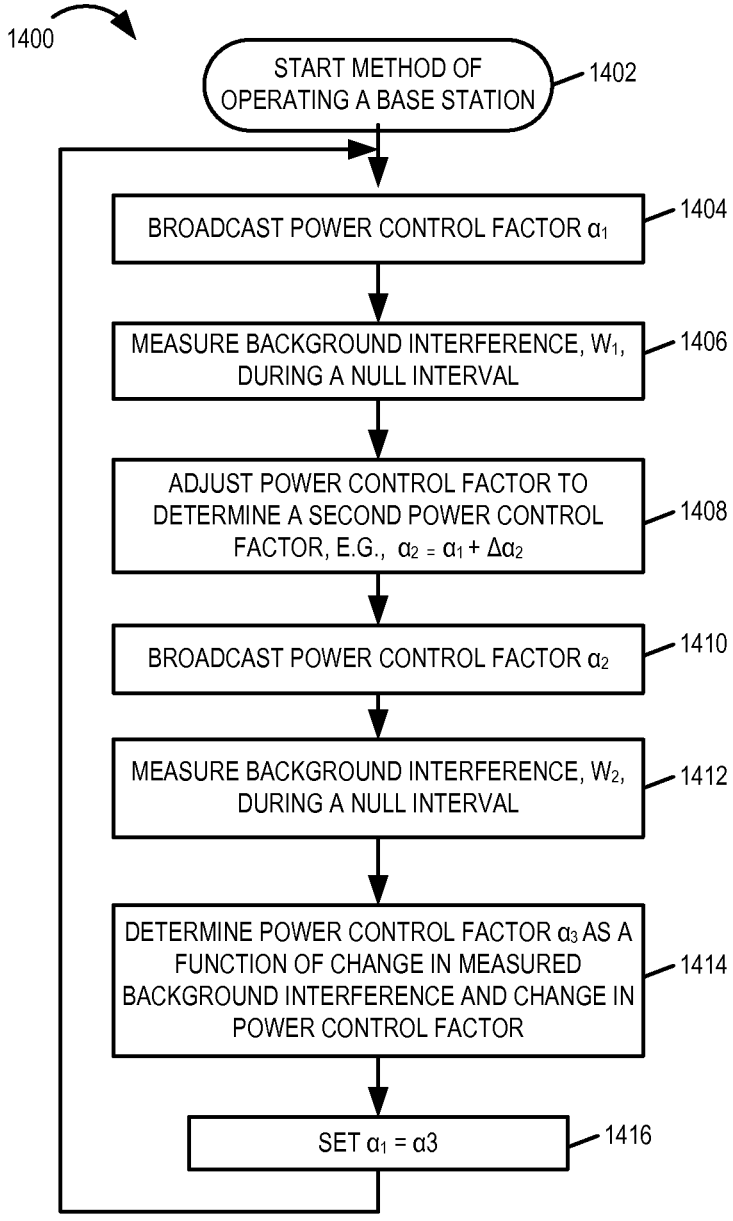
1400
START METHOD OF OPERATING A BASE STATION
1402
BROADCAST POWER CONTROL FACTOR α_1
1404
MEASURE BACKGROUND INTERFERENCE, W_1, DURING A NULL INTERVAL
1406
ADJUST POWER CONTROL FACTOR TO DETERMINE A SECOND POWER CONTROL FACTOR, E.G., $\alpha_2 = \alpha_1 + \Delta\alpha_2$
1408
BROADCAST POWER CONTROL FACTOR α_2
1410
MEASURE BACKGROUND INTERFERENCE, W_2, DURING A NULL INTERVAL
1412
DETERMINE POWER CONTROL FACTOR α_3 AS A FUNCTION OF CHANGE IN MEASURED BACKGROUND INTERFERENCE AND CHANGE IN POWER CONTROL FACTOR
1414
SET $\alpha_1 = \alpha 3$
1416

FIGURE 19

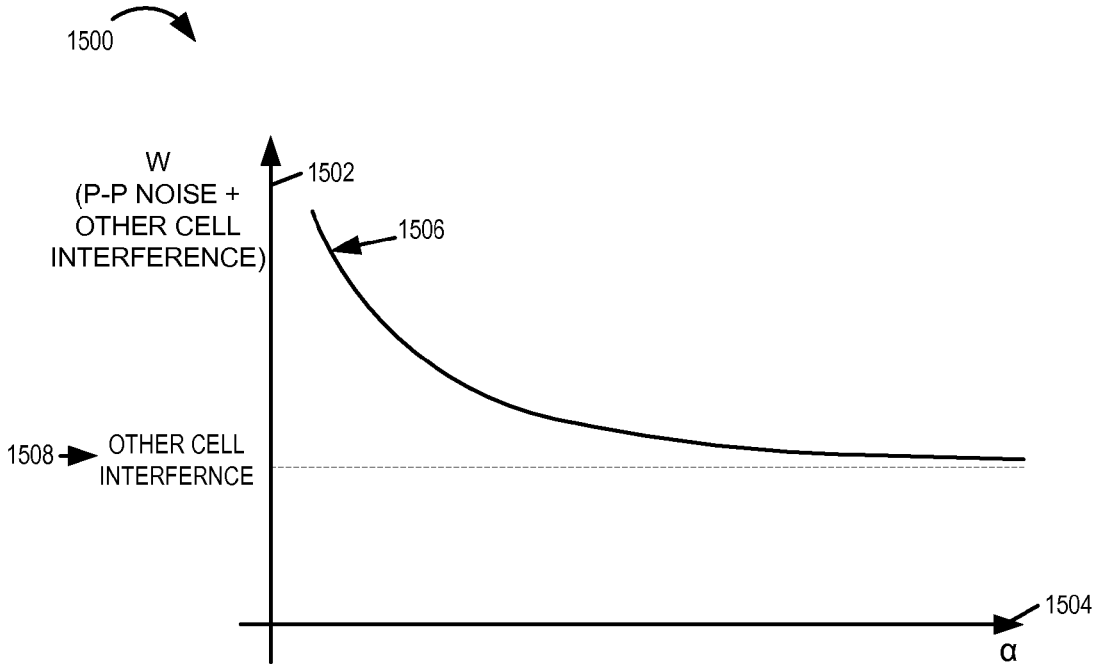

FIGURE 20

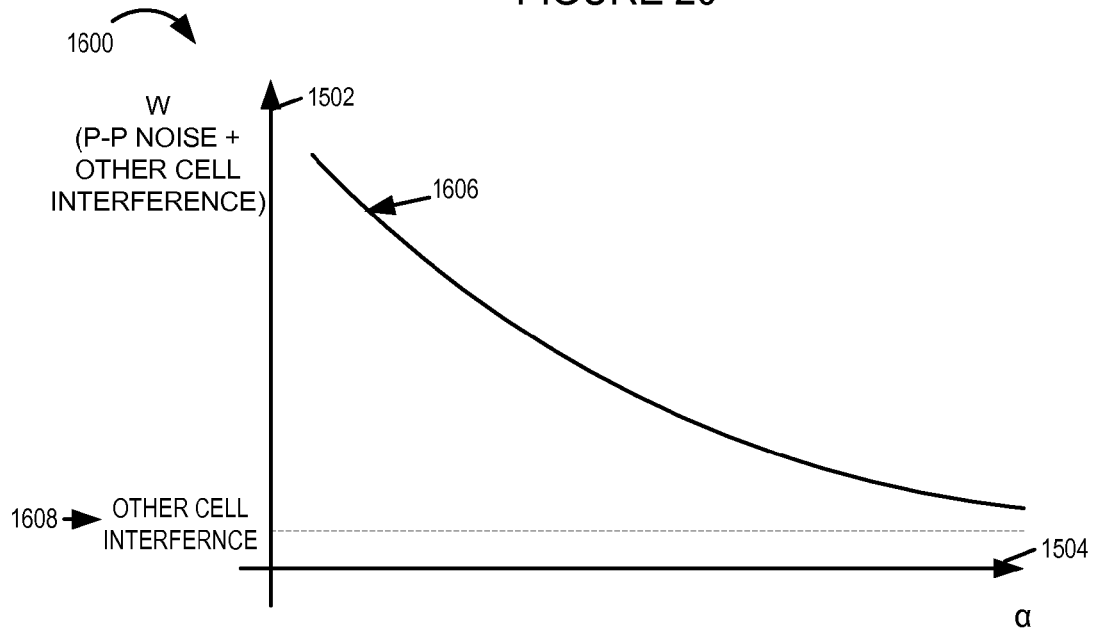

FIGURE 21

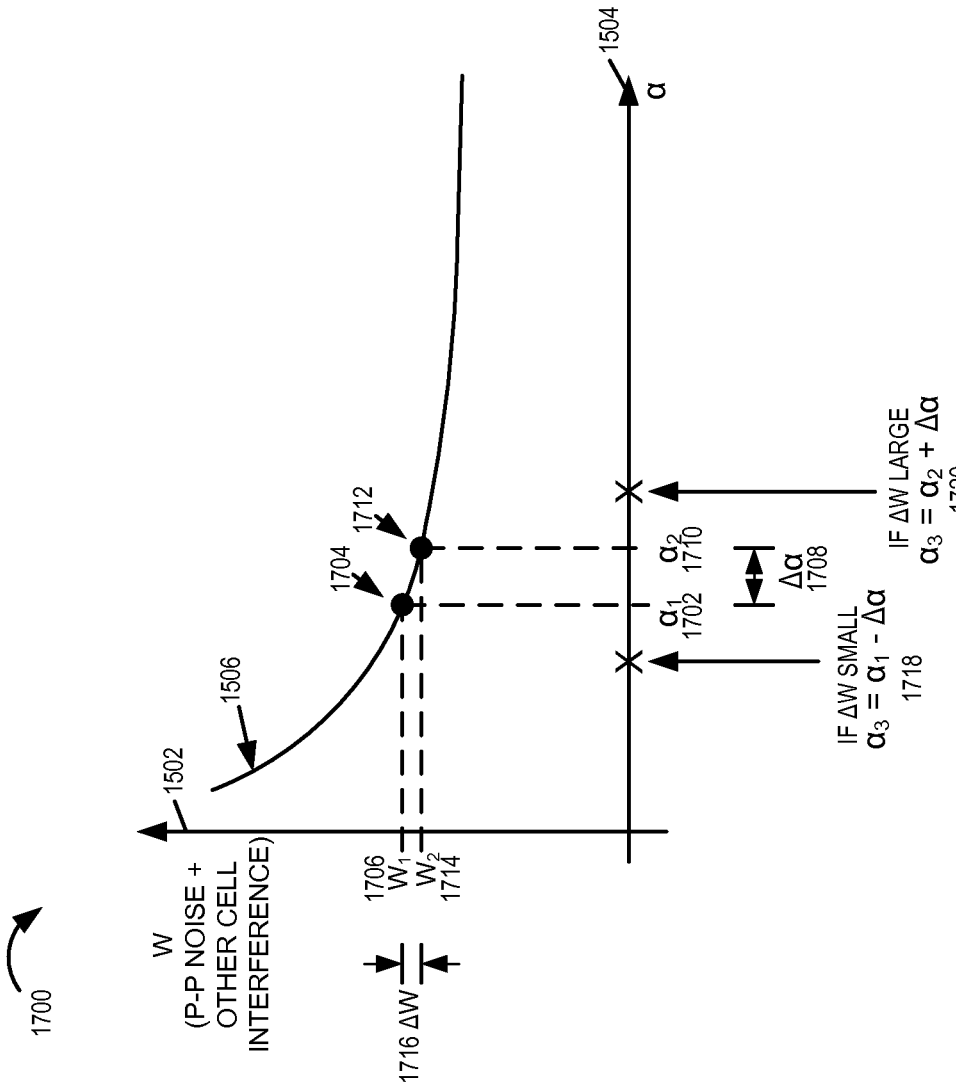
1700
W
(P-P NOISE + OTHER CELL INTERFERENCE)
1502
1506
1504
α
1712
1704
1706
W1
W2
1714
1716 ΔW
α1
1702
α2
1710
Δα
1708
IF ΔW SMALL
α3 = α1 - Δα
1718
IF ΔW LARGE
α3 = α2 + Δα
1720

FIGURE 22

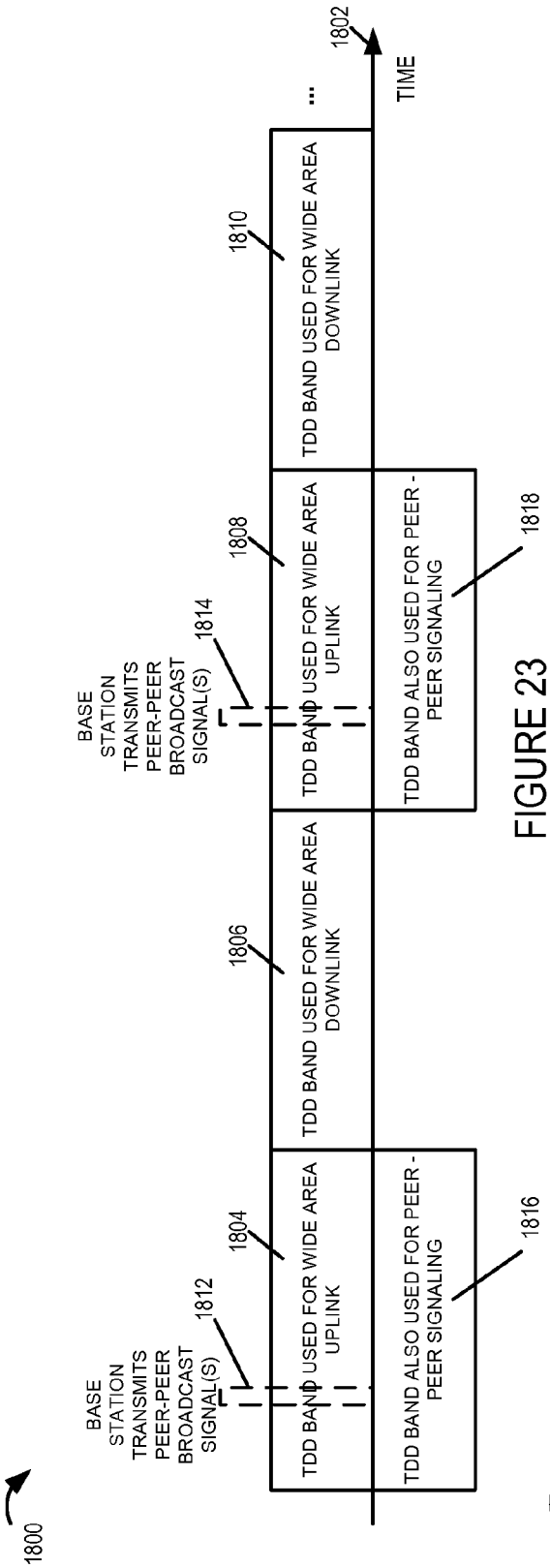

FIGURE 23

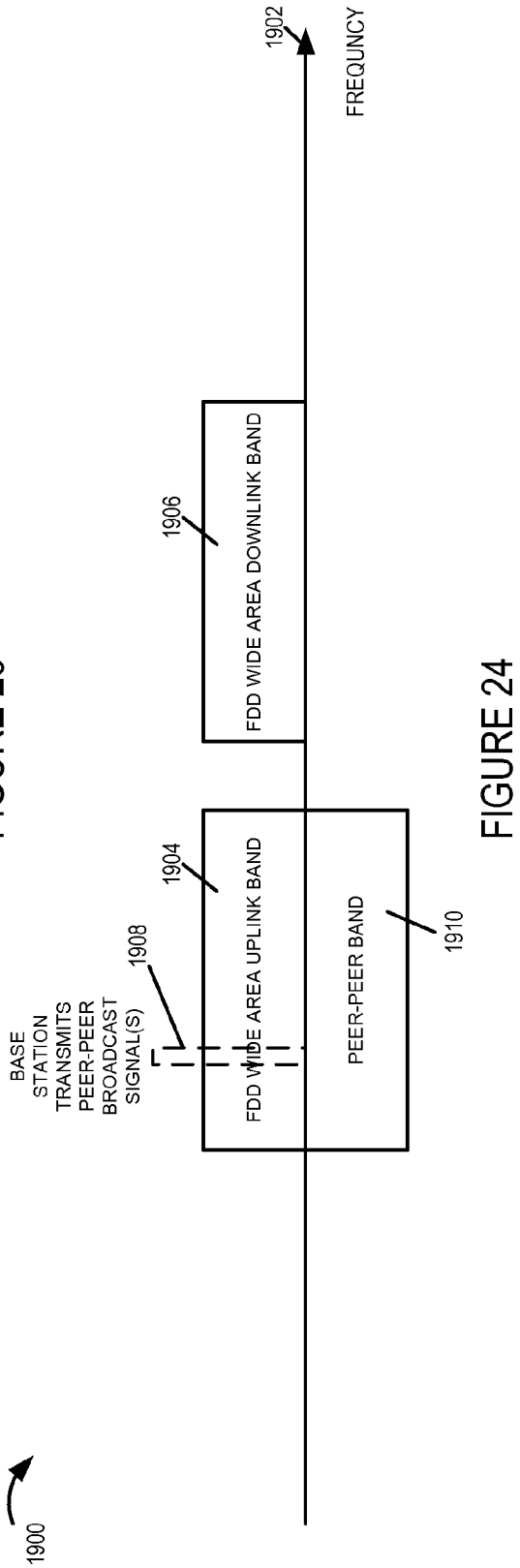

FIGURE 24

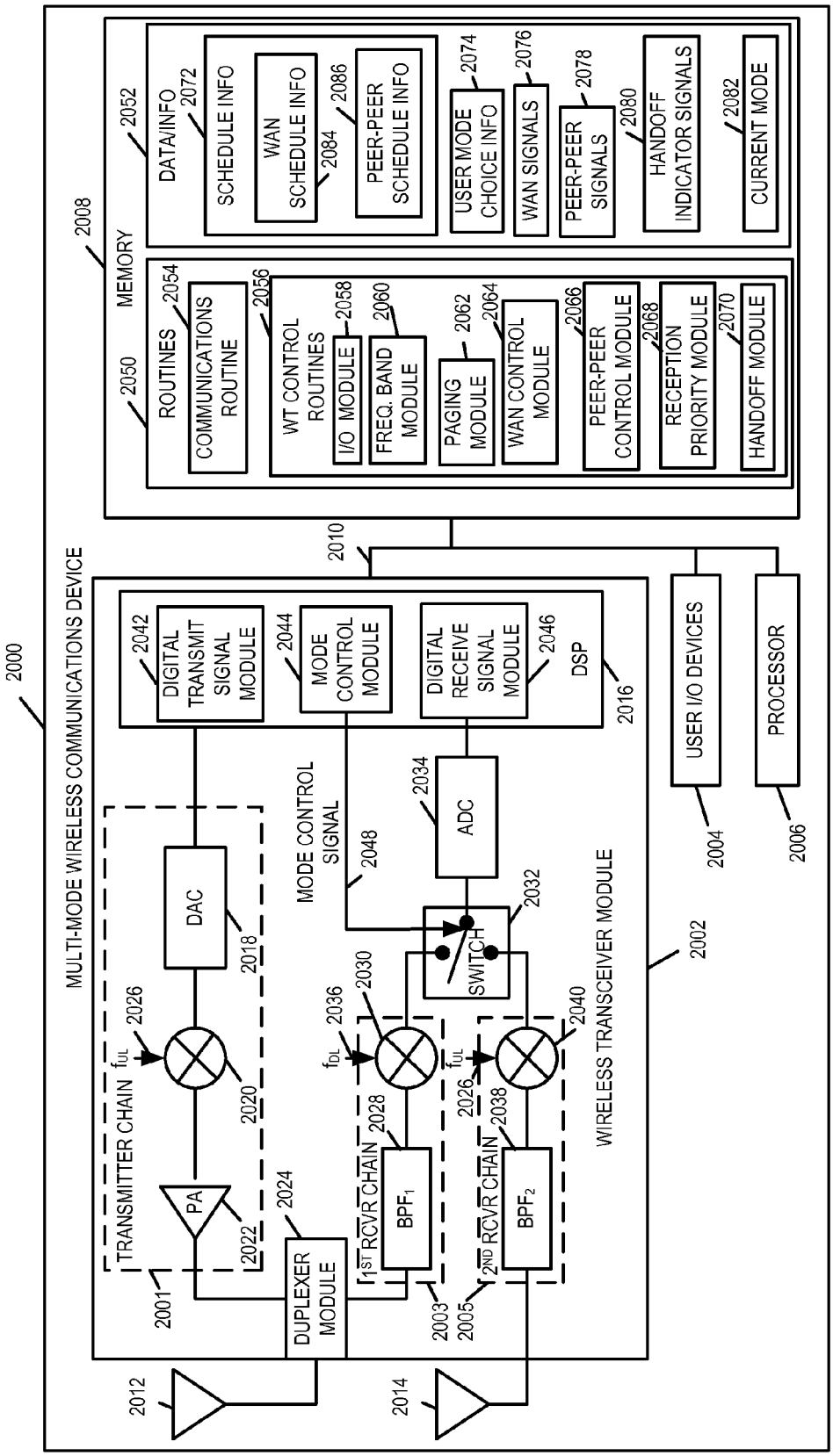
2000
MULTI-MODE WIRELESS COMMUNICATIONS DEVICE
2008
MEMORY
2050
ROUTINES
2054
COMMUNICATIONS ROUTINE
2056
WT CONTROL ROUTINES
2058
I/O MODULE
2060
FREQ. BAND MODULE
2062
PAGING MODULE
2064
WAN CONTROL MODULE
2066
PEER-PEER CONTROL MODULE
2068
RECEPTION PRIORITY MODULE
2070
HANDOFF MODULE
2052
DATA/INFO
2072
SCHEDULE INFO
2084
WAN SCHEDULE INFO
2086
PEER-PEER SCHEDULE INFO
2074
USER MODE CHOICE INFO
2076
WAN SIGNALS
2078
PEER-PEER SIGNALS
2080
HANDOFF INDICATOR SIGNALS
2082
CURRENT MODE
2010
2042
DIGITAL TRANSMIT SIGNAL MODULE
2044
MODE CONTROL MODULE
2046
DIGITAL RECEIVE SIGNAL MODULE
DSP
2016
USER I/O DEVICES
2004
PROCESSOR
2006
MODE CONTROL SIGNAL
2048
2034
ADC
2032
SWITCH
DAC
2018
2026
f_{UL}
2020
TRANSMITTER CHAIN
PA
2022
2001
2024
DUPLEXER MODULE
2036
f_{DL}
2030
2028
1ST RCVR CHAIN
BPF_1
2003
2040
f_{UL}
2026
2038
2ND RCVR CHAIN
BPF_2
2005
WIRELESS TRANSCEIVER MODULE
2002
2012
2014

FIGURE 25

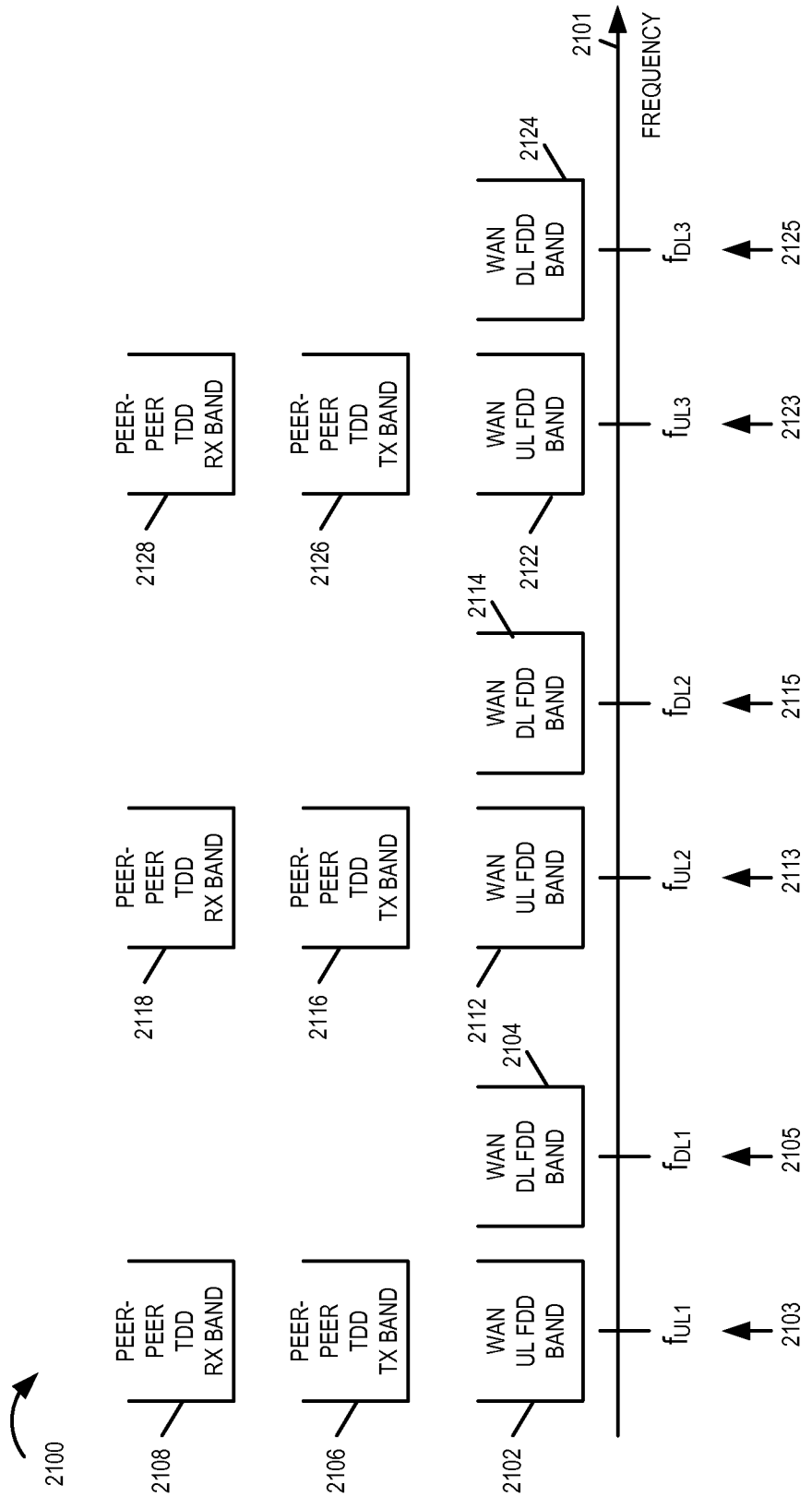
2100
2101
FREQUENCY
2102
WAN UL FDD BAND
2103
f_{UL1}
2104
WAN DL FDD BAND
2105
f_{DL1}
2106
PEER-PEER TDD TX BAND
2108
PEER-PEER TDD RX BAND
2112
WAN UL FDD BAND
2113
f_{UL2}
2114
WAN DL FDD BAND
2115
f_{DL2}
2116
PEER-PEER TDD TX BAND
2118
PEER-PEER TDD RX BAND
2122
WAN UL FDD BAND
2123
f_{UL3}
2124
WAN DL FDD BAND
2125
f_{DL3}
2126
PEER-PEER TDD TX BAND
2128
PEER-PEER TDD RX BAND

FIGURE 26

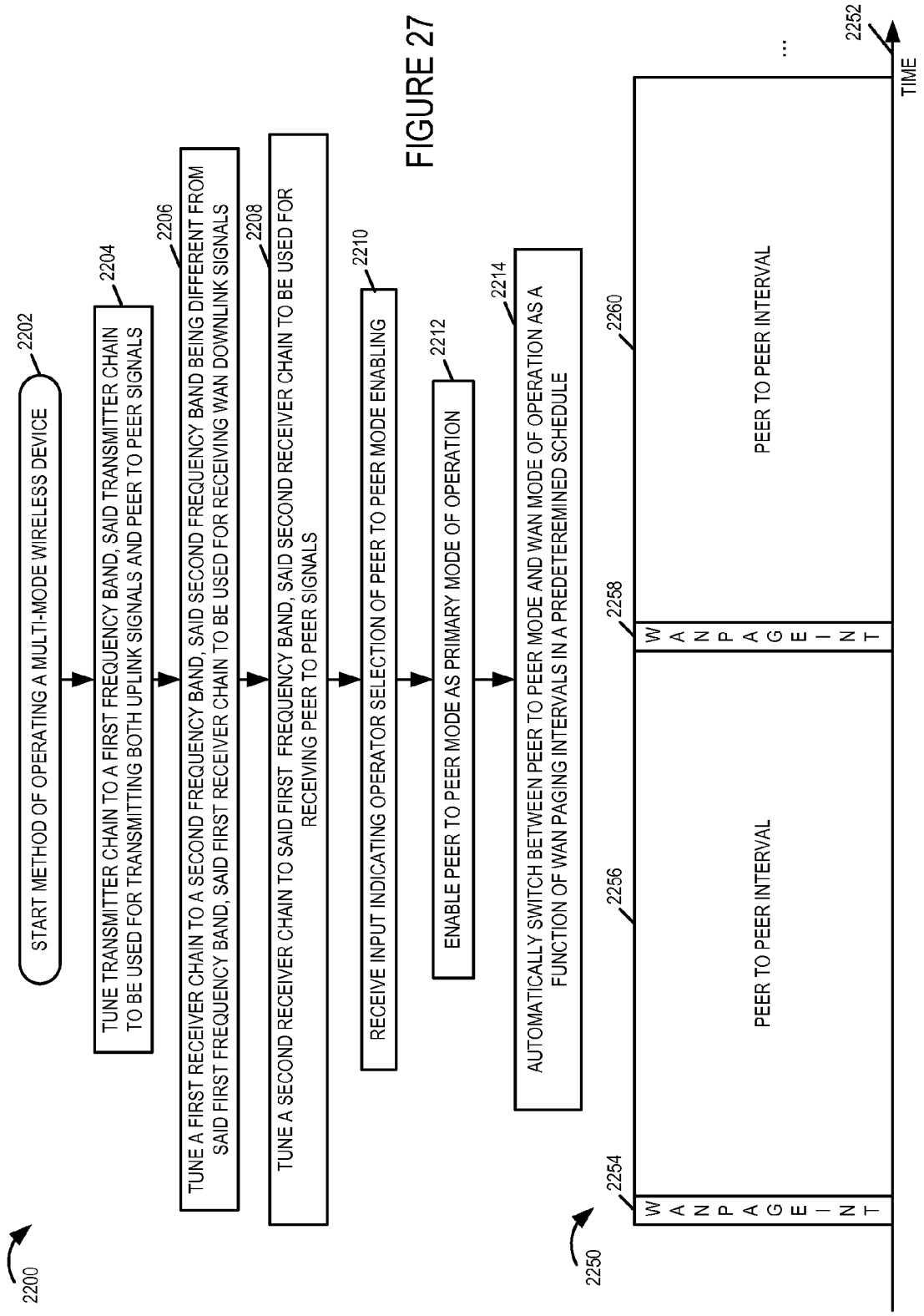
2200
START METHOD OF OPERATING A MULTI-MODE WIRELESS DEVICE
2202
TUNE TRANSMITTER CHAIN TO A FIRST FREQUENCY BAND, SAID TRANSMITTER CHAIN TO BE USED FOR TRANSMITTING BOTH UPLINK SIGNALS AND PEER TO PEER SIGNALS
2204
TUNE A FIRST RECEIVER CHAIN TO A SECOND FREQUENCY BAND, SAID SECOND FREQUENCY BAND BEING DIFFERENT FROM SAID FIRST FREQUENCY BAND, SAID FIRST RECEIVER CHAIN TO BE USED FOR RECEIVING WAN DOWNLINK SIGNALS
2206
TUNE A SECOND RECEIVER CHAIN TO SAID FIRST FREQUENCY BAND, SAID SECOND RECEIVER CHAIN TO BE USED FOR RECEIVING PEER TO PEER SIGNALS
2208
RECEIVE INPUT INDICATING OPERATOR SELECTION OF PEER TO PEER MODE ENABLING
2210
ENABLE PEER TO PEER MODE AS PRIMARY MODE OF OPERATION
2212
AUTOMATICALLY SWITCH BETWEEN PEER TO PEER MODE AND WAN MODE OF OPERATION AS A FUNCTION OF WAN PAGING INTERVALS IN A PREDETEREMINED SCHEDULE
2214
2250
2254
WAN PAGING INTERVAL
2256
PEER TO PEER INTERVAL
2258
WAN PAGING INTERVAL
2260
PEER TO PEER INTERVAL
...
2252
TIME

FIGURE 27

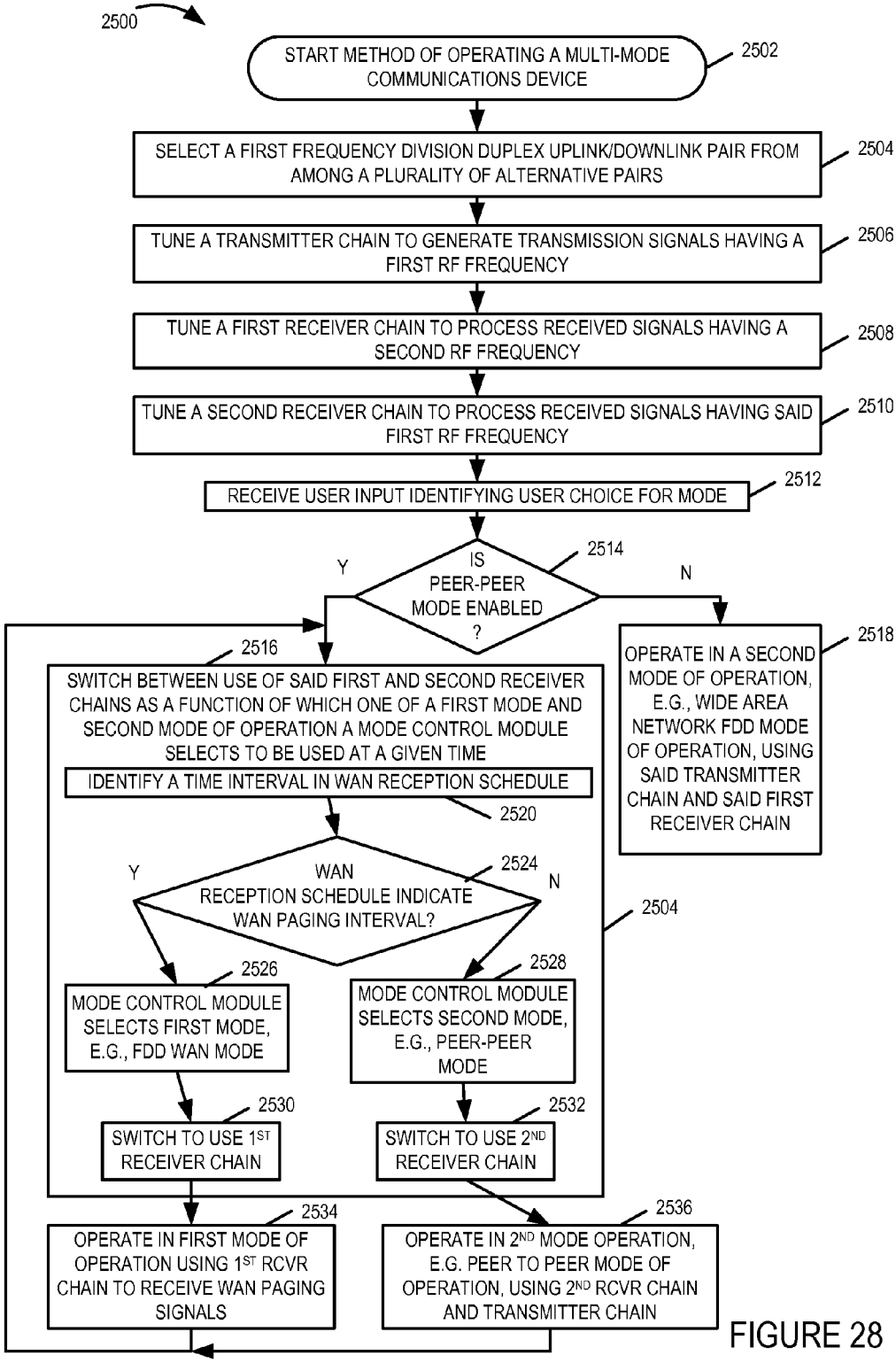
2500
START METHOD OF OPERATING A MULTI-MODE COMMUNICATIONS DEVICE
2502
SELECT A FIRST FREQUENCY DIVISION DUPLEX UPLINK/DOWNLINK PAIR FROM AMONG A PLURALITY OF ALTERNATIVE PAIRS
2504
TUNE A TRANSMITTER CHAIN TO GENERATE TRANSMISSION SIGNALS HAVING A FIRST RF FREQUENCY
2506
TUNE A FIRST RECEIVER CHAIN TO PROCESS RECEIVED SIGNALS HAVING A SECOND RF FREQUENCY
2508
TUNE A SECOND RECEIVER CHAIN TO PROCESS RECEIVED SIGNALS HAVING SAID FIRST RF FREQUENCY
2510
RECEIVE USER INPUT IDENTIFYING USER CHOICE FOR MODE
2512
IS PEER-PEER MODE ENABLED ?
2514
Y
N
OPERATE IN A SECOND MODE OF OPERATION, E.G., WIDE AREA NETWORK FDD MODE OF OPERATION, USING SAID TRANSMITTER CHAIN AND SAID FIRST RECEIVER CHAIN
2518
2516
SWITCH BETWEEN USE OF SAID FIRST AND SECOND RECEIVER CHAINS AS A FUNCTION OF WHICH ONE OF A FIRST MODE AND SECOND MODE OF OPERATION A MODE CONTROL MODULE SELECTS TO BE USED AT A GIVEN TIME
IDENTIFY A TIME INTERVAL IN WAN RECEPTION SCHEDULE
2520
WAN RECEPTION SCHEDULE INDICATE WAN PAGING INTERVAL?
2524
Y
N
2504
MODE CONTROL MODULE SELECTS FIRST MODE, E.G., FDD WAN MODE
2526
MODE CONTROL MODULE SELECTS SECOND MODE, E.G., PEER-PEER MODE
2528
SWITCH TO USE 1ST RECEIVER CHAIN
2530
SWITCH TO USE 2ND RECEIVER CHAIN
2532
OPERATE IN FIRST MODE OF OPERATION USING 1ST RCVR CHAIN TO RECEIVE WAN PAGING SIGNALS
2534
OPERATE IN 2ND MODE OPERATION, E.G. PEER TO PEER MODE OF OPERATION, USING 2ND RCVR CHAIN AND TRANSMITTER CHAIN
2536

FIGURE 28

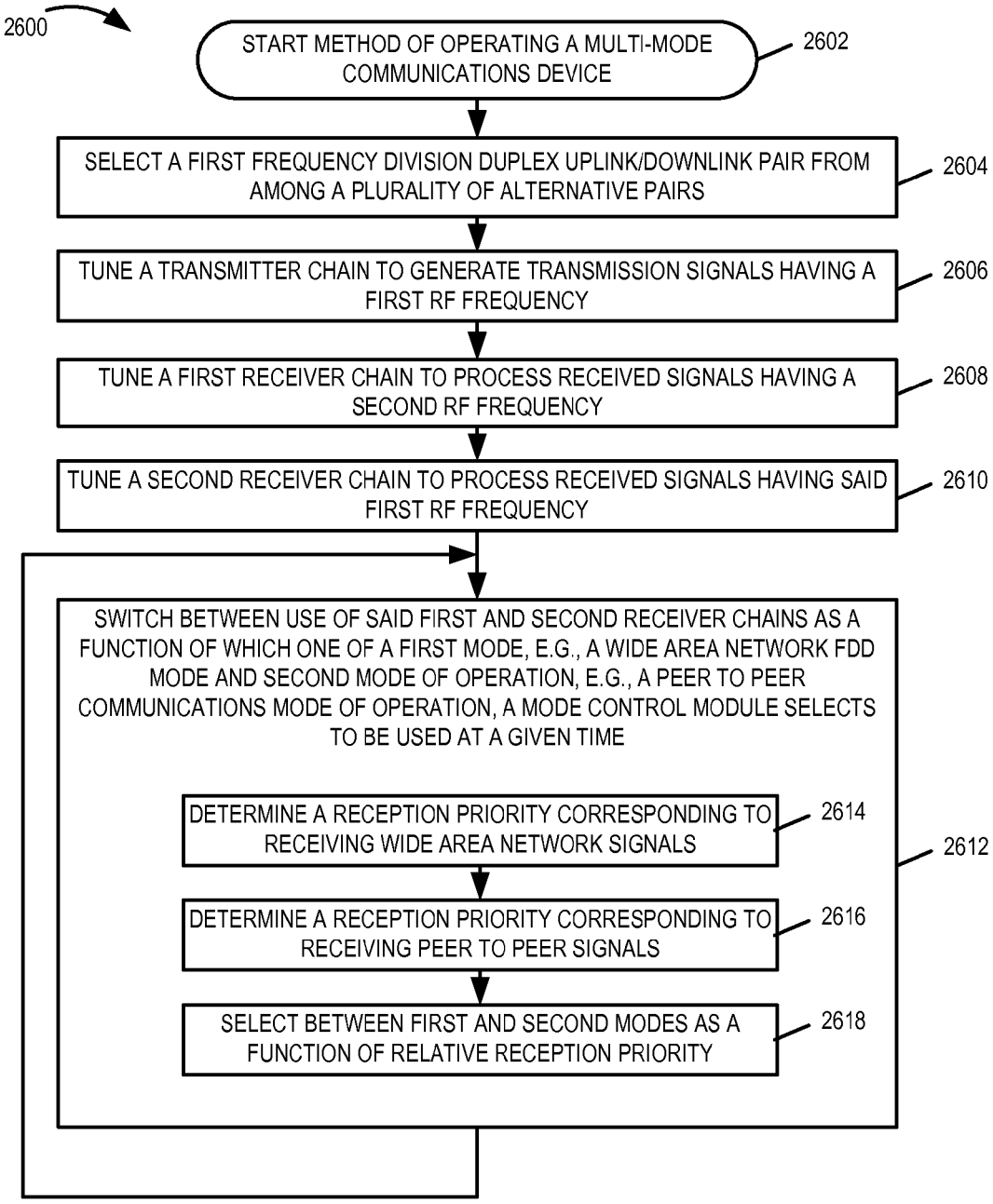
2600
START METHOD OF OPERATING A MULTI-MODE COMMUNICATIONS DEVICE
2602
SELECT A FIRST FREQUENCY DIVISION DUPLEX UPLINK/DOWNLINK PAIR FROM AMONG A PLURALITY OF ALTERNATIVE PAIRS
2604
TUNE A TRANSMITTER CHAIN TO GENERATE TRANSMISSION SIGNALS HAVING A FIRST RF FREQUENCY
2606
TUNE A FIRST RECEIVER CHAIN TO PROCESS RECEIVED SIGNALS HAVING A SECOND RF FREQUENCY
2608
TUNE A SECOND RECEIVER CHAIN TO PROCESS RECEIVED SIGNALS HAVING SAID FIRST RF FREQUENCY
2610
SWITCH BETWEEN USE OF SAID FIRST AND SECOND RECEIVER CHAINS AS A FUNCTION OF WHICH ONE OF A FIRST MODE, E.G., A WIDE AREA NETWORK FDD MODE AND SECOND MODE OF OPERATION, E.G., A PEER TO PEER COMMUNICATIONS MODE OF OPERATION, A MODE CONTROL MODULE SELECTS TO BE USED AT A GIVEN TIME
DETERMINE A RECEPTION PRIORITY CORRESPONDING TO RECEIVING WIDE AREA NETWORK SIGNALS
2614
DETERMINE A RECEPTION PRIORITY CORRESPONDING TO RECEIVING PEER TO PEER SIGNALS
2616
SELECT BETWEEN FIRST AND SECOND MODES AS A FUNCTION OF RELATIVE RECEPTION PRIORITY
2618
2612

FIGURE 29

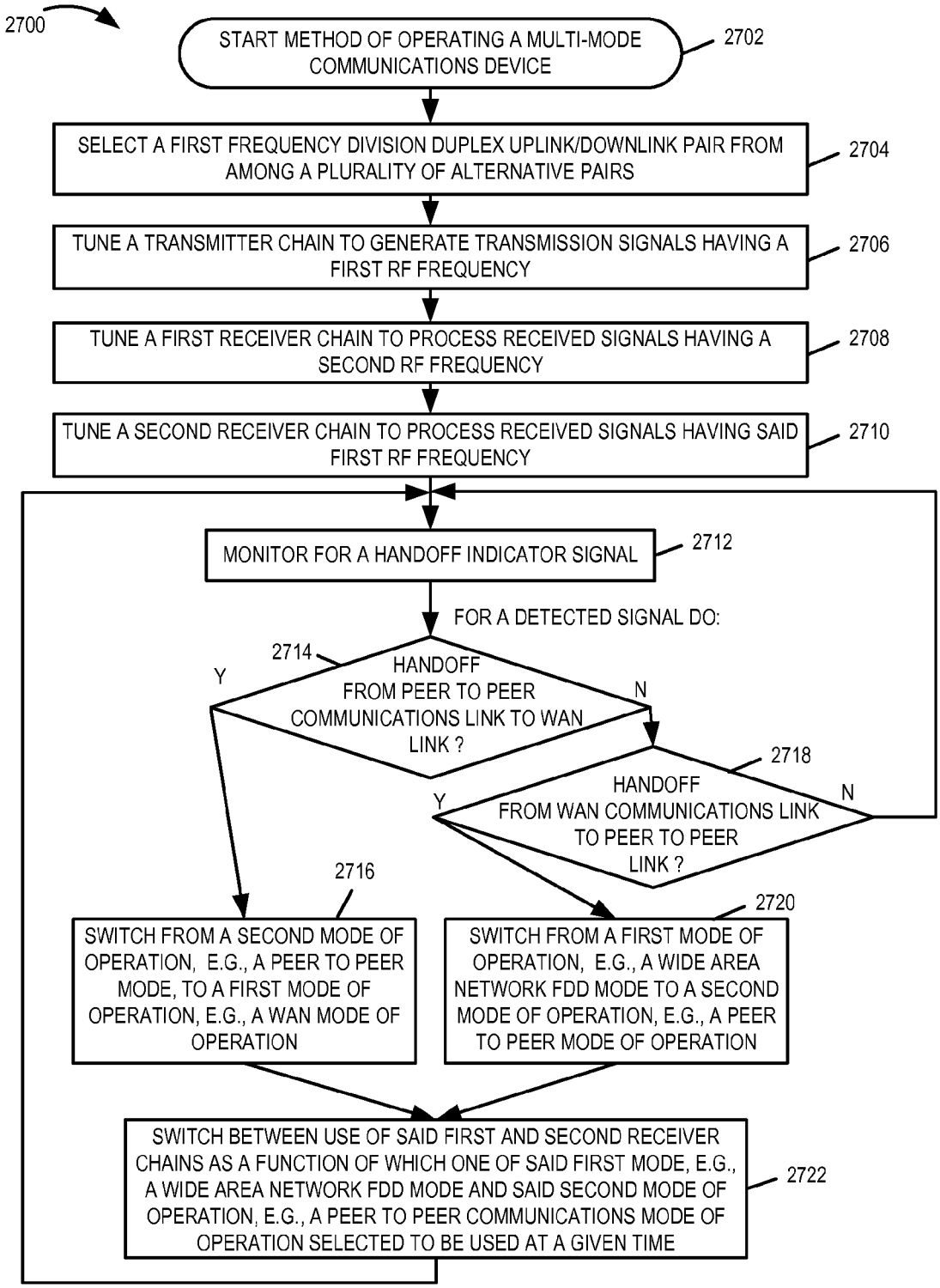
2700
START METHOD OF OPERATING A MULTI-MODE COMMUNICATIONS DEVICE
2702
SELECT A FIRST FREQUENCY DIVISION DUPLEX UPLINK/DOWNLINK PAIR FROM AMONG A PLURALITY OF ALTERNATIVE PAIRS
2704
TUNE A TRANSMITTER CHAIN TO GENERATE TRANSMISSION SIGNALS HAVING A FIRST RF FREQUENCY
2706
TUNE A FIRST RECEIVER CHAIN TO PROCESS RECEIVED SIGNALS HAVING A SECOND RF FREQUENCY
2708
TUNE A SECOND RECEIVER CHAIN TO PROCESS RECEIVED SIGNALS HAVING SAID FIRST RF FREQUENCY
2710
MONITOR FOR A HANDOFF INDICATOR SIGNAL
2712
FOR A DETECTED SIGNAL DO:
2714
HANDOFF FROM PEER TO PEER COMMUNICATIONS LINK TO WAN LINK ?
Y
N
2718
HANDOFF FROM WAN COMMUNICATIONS LINK TO PEER TO PEER LINK ?
Y
N
2716
SWITCH FROM A SECOND MODE OF OPERATION, E.G., A PEER TO PEER MODE, TO A FIRST MODE OF OPERATION, E.G., A WAN MODE OF OPERATION
2720
SWITCH FROM A FIRST MODE OF OPERATION, E.G., A WIDE AREA NETWORK FDD MODE TO A SECOND MODE OF OPERATION, E.G., A PEER TO PEER MODE OF OPERATION
SWITCH BETWEEN USE OF SAID FIRST AND SECOND RECEIVER CHAINS AS A FUNCTION OF WHICH ONE OF SAID FIRST MODE, E.G., A WIDE AREA NETWORK FDD MODE AND SAID SECOND MODE OF OPERATION, E.G., A PEER TO PEER COMMUNICATIONS MODE OF OPERATION SELECTED TO BE USED AT A GIVEN TIME
2722

FIGURE 30

METHODS AND APPARATUS RELATED TO POWER CONTROL AND/OR INTERFERENCE MANAGEMENT IN A MIXED WIRELESS COMMUNICATIONS SYSTEM

RELATED APPLICATIONS

The present application is a division of U.S. application Ser. No. 11/764,366 filed on Jun. 18, 2007 titled "METHODS AND APPARATUS RELATED TO POWER CONTROL AND/OR INTERFERENCE MANAGEMENT IN A MIXED WIRELESS COMMUNICATIONS SYSTEM" that claims the benefit of U.S. Provisional Patent Application Ser. No. 60/845,053 filed on Sep. 15, 2006, titled "BEACONS IN A MIXED WIRELESS COMMUNICATION SYSTEM" which are hereby expressly incorporated by reference.

FIELD

The present invention is directed to methods and apparatus for wireless communications, and more particularly to methods and apparatus related to peer to peer communications.

BACKGROUND

Wireless spectrum is an expensive and valuable resource. In wide area network systems, e.g., cellular systems, wireless spectrum allocated to the WAN is, at times, less than fully utilized. It would be advantageous if methods and apparatus were developed which recognized and/or utilized such underutilized air link resources. It would be beneficial if such methods and apparatus were adaptive such that interference to the WAN communications generated from the additional usage of the air link resource could be managed.

SUMMARY

Methods and apparatus related to the sharing of wide area network (WAN) uplink bandwidth with peer to peer communication signaling usage are described. A base station transmits a signal to be used by a peer to peer wireless terminal in controlling its peer to peer transmit power level. The peer to peer wireless terminal receives and measures the strength of the base station signal. The measurement information is used by the peer to peer wireless terminal in determining whether or not peer to peer signal transmission is permitted and/or in determining a peer to peer transmission power level. Current service level information and/or encoded information, e.g., an interference level indicator value, conveyed by the received base station signal are, in various embodiments, also utilized by the peer to peer wireless terminal in determining a peer to peer transmission power level.

In various embodiments, the base station varies the transmission power level of a signal being transmitted and/or varies the information being communicated by the signal. In this way, the base station can dynamically regulate interference being generated by the peer to peer wireless terminals which is impacting its reception of WAN uplink signals.

An exemplary method of operating a wireless communications device supporting peer to peer communications comprises: receiving a first signal from a base station; performing a measurement on the received signal; and controlling peer to peer transmission power for at least some peer to peer signal transmissions as a function of the result of the measurement of said first received signal. An exemplary wireless communications device supporting peer to peer communications, in accordance with various embodiments, comprises: a wireless receiver module for receiving a signal from a base station; a measurement module for performing a measurement on the received signal; and a peer to peer transmission power control module for controlling peer to peer transmission power for at least some peer to peer signal transmissions as a function of the result of the measurement of said received signal.

An exemplary method of operating a base station, in accordance with various embodiments comprises: measuring during an uplink null time period uplink background interference; and transmitting a first uplink transmission power control value. An exemplary base station, in accordance with various embodiments includes: an interference measurement module for measuring during an uplink null time period uplink background interference; and a transmitter module for transmitting a first uplink transmission power control value. In some embodiments, an indication of interference from peer to peer signaling is derived from the measurement during the uplink null time period. The transmitted uplink transmission power control value is intended to be received and utilized by peer to peer wireless terminals to control their transmission power level and thus impact the interference being experienced by the base station receiver attempting to recover cellular uplink signals.

Various embodiments are directed to communications systems including a mixture of wide area network wireless terminals and peer to peer wireless terminals in which both types are responsive to the same base station received signal, e.g. a wireless terminal transmission power control signal, but apply different interpretations to the same received signal. An exemplary communications system comprises: a first wireless communications device including a received signal power measurement module for measuring the power of a signal received from a base station and a peer to peer signal transmission power control module for controlling a peer to peer signal transmission power level as a function of the measured power of the signal from the base station in accordance with a first function; and a second wireless communications device including a received signal power measurement module for measuring the power level of signals received from said base station and a wide area network signal transmission power control module for controlling wide area signal transmission power level as a function of the measured power of a signal from the base station in accordance with a second function, said second function being different from said first function.

While various embodiments have been discussed in the summary above, it should be appreciated that not necessarily all embodiments include the same features and some of the features described above are not necessary but can be desirable in some embodiments. Numerous additional features, embodiments and benefits are discussed in the detailed description which follows.

BRIEF DESCRIPTION OF THE FIGURES

FIG. **1** is a flowchart of an exemplary method of operating a wireless communications terminal, e.g., a wireless communications terminal supporting peer to peer communications, in accordance with various embodiments.

FIG. **2** is a drawing of an exemplary wireless terminal, e.g., mobile node supporting peer to peer communications, in accordance with various embodiments.

FIG. **3** is a flowchart of an exemplary method of operating a base station, in accordance with various embodiments.

FIG. **4** is a drawing of an exemplary base station in accordance with various embodiments.

FIG. **5** is a flowchart of an exemplary method of operating a wireless communications device which supports peer to peer signaling in accordance with various embodiments.

FIG. **6** is a drawing of an exemplary wireless communications device, e.g., a wireless terminal such as a mobile node, supporting peer to peer communications in accordance with various embodiments.

FIG. **7** comprising the combination of FIG. **7**A and FIG. **7**B is a flowchart of an exemplary method of operating a wireless communications device supporting peer to peer communications in accordance with various embodiments.

FIG. **8** is a drawing of an exemplary wireless communications device, e.g., wireless terminal such as a mobile node, supporting peer to peer communications in accordance with various embodiments.

FIG. **9** is a drawing illustrating one exemplary embodiment including an exemplary communications system, a table describing frequency band usage information and a table illustrating exemplary peer to peer wireless terminal transmission power level information.

FIG. **10** is a drawing of an exemplary wireless communications system in accordance with various embodiments.

FIG. **11** is a flowchart of an exemplary method of operating a base station in accordance with various embodiments.

FIG. **12** is a flowchart of an exemplary method of operating a base station in accordance with various embodiments.

FIG. **13** is a drawing of an exemplary base station in accordance with various embodiments.

FIG. **14** is a drawing including an exemplary communications system and a frequency band usage table in accordance with various embodiments.

FIG. **15** is a drawing illustrating a feature of various embodiments, in which a wide area network has a silent period in which the base station monitors for and measures peer to peer noise.

FIG. **16** is a drawing illustrating several features of various embodiments, and is a continuation of the example of FIG. **15**.

FIG. **17** is a drawing of an exemplary look-up table for control values illustrating a feature of various embodiments.

FIG. **18** is a flowchart of an exemplary method of operating a base station in accordance with various embodiments, e.g., a base station in which its uplink bandwidth is also utilized for peer to peer signaling.

FIG. **19** is a flowchart of an exemplary method of operating a base station in accordance with various embodiments, e.g., a base station in which its uplink bandwidth is also utilized for peer to peer signaling.

FIG. **20** is a drawing of a plot of noise W on the vertical axis vs control factor α on the horizontal axis.

FIG. **21** is a drawing of a plot of noise W on the vertical axis vs control factor α on the horizontal axis, which illustrates a different level of other cell interference and a different characteristic curve as compared to FIG. **15**.

FIG. **22** illustrates an exemplary method of adjusting the selection of power control factor α used in various embodiments.

FIG. **23** is a drawing illustrating exemplary bandwidth usage in some embodiments utilizing a time division duplex (TDD) for the wide area network, e.g., for the cellular communications.

FIG. **24** is a drawing illustrating exemplary bandwidth usage in some embodiments utilizing a frequency division duplex (FDD) for the wide area network, e.g., for the cellular communications.

FIG. **25** is a drawing of an exemplary multi-mode wireless communications device implemented in accordance with various embodiments.

FIG. **26** is a drawing illustrating exemplary frequency bands and shared frequency band usage between wide area network communications usage and peer to peer communications usage in accordance with various embodiments.

FIG. **27** includes a flowchart of an exemplary method of operating a multi-mode wireless communications device and exemplary timing structure information in accordance with various embodiments.

FIG. **28** is a flowchart of an exemplary method of operating a multi-mode wireless communications device in accordance with various embodiments.

FIG. **29** is a flowchart of an exemplary method of operating a multi-mode wireless communications device in accordance with various embodiments.

FIG. **30** is a flowchart of an exemplary method of operating a multi-mode wireless communications device in accordance with various embodiments.

DETAILED DESCRIPTION

FIG. **1** is a flowchart **100** of an exemplary method of operating a wireless communications terminal, e.g., a wireless communications terminal supporting peer to peer communications, in accordance with various embodiments. The exemplary method starts in step **102**, where the wireless communications terminal is powered on and initialized. Operation proceeds from start step **102** to step **104**. In step **104**, the wireless communications terminal scans an uplink bandwidth to detect a signal from a base station, e.g., a beacon signal from a base station. In various embodiments, the uplink bandwidth includes a set of frequencies used for devices to transmit signals to the base station, e.g., a set of OFDM tones comprising an uplink tone block. In some embodiments, the signal being scanned for from the base station has a predetermined format. In some embodiments, the signal from the base station being scanned for is transmitted at a predetermined time, e.g., with respect to a recurring timing structure being used by the base station, or with respect to a predetermined time with respect to a peer to peer timing structure. In some embodiments, wherein the base station signal is a beacon signal, the beacon signal is a signal including less than three tones in an OFDM symbol.

Operation proceeds from step **104** to step **106**, in which the wireless communications terminal evaluates the signal from the base station that it has detected. In some embodiments, evaluating the signal from the base station includes evaluating a transmission pattern of the base station signal. Step **106** includes sub-step **110**. In sub-step **110**, the wireless communications terminal measures the power level of the signal from the base station. Then, in step **112**, the wireless communications terminal determines if the evaluation of step **106** satisfies a predetermined criteria. The predetermined criteria is, e.g., that the measured level of the signal received from the base station is below a predetermined threshold. The predetermined threshold is, in some embodiments, selected to correspond to an expected level of tolerable interference from the wireless communications device at the base station when the wireless communications device transmits peer to peer signals. If the criteria is satisfied, operation proceeds from step **112** to step **114**; otherwise, operation proceeds from step **112** to step **116**. In step **114**, the wireless communications terminal transmits a peer to peer signal, while in step **116**, the wireless communications terminal refrains from transmitting a peer to peer signal.

Operation proceeds from step **114** to step **118**, in which the wireless communications terminal monitors for an additional base station signal, and then in step **120**, the base station checks if there is a power difference detected between the last additional base station signal and a previously detected base station signal, e.g., the signal detected in step **104**. If there is no power difference detected, the wireless communications terminal is allowed to continue with peer to peer transmissions and operation proceeds from step **120** back to step **118** to monitor for additional base station signals; however if a power difference was detected, then operation proceeds from step **120** to step **122**.

In step **122**, the wireless communications terminal adjusts wireless terminal transmission power as a function of said difference. Step **122** includes sub-steps **124**, **126** and **128**. In sub-step **124**, the wireless communications terminal checks as to whether or not the power level of the last additional base station signal is in an acceptable range. If the power level of the last additional base station signal is too high, that may indicate that the wireless communications terminal is too close to the base station and that peer to peer transmission from the wireless communications terminal will cause too much interference from the perspective of the base station receiver, and thus such transmissions are not allowed. Alternatively, if the power level of the last additional base station signal is too low, that may indicate that the wireless communications device has moved outside the range of peer to peer service corresponding to the base station signal, and that the wireless communications terminal may be in a region corresponding to a different type of spectrum use, e.g., corresponding to a different service provider and/or different technology, and therefore wireless communications terminal transmission is not allowed. If it is determined in sub-step **124** that the power level of the last additional base station signal is not in an acceptable range then operation proceeds from sub-step **124** to sub-step **126**; otherwise operation proceeds from sub-step **124** to sub-step **128**.

In sub-step **126**, the wireless communications terminal adjusts its transmission power as a function of said power difference and continues with peer to peer transmissions. During some times, adjusting the transmission power includes reducing transmission power as a function of said difference, while at other times, adjusting the transmission power as a function of said difference includes increasing the transmission power as a function of said difference. For example, if the wireless communications terminal detects an increase in the measured power level of the signal from the base station, the wireless communications reduces its peer to peer transmission signaling power level. Alternatively, if the wireless communications terminal detects a decrease in the measured power level of the signal from the base station, the wireless communications increases its peer to peer transmission signaling power level. While at still other times, adjusting wireless communications terminal transmission power as a function of said difference includes maintaining transmission power level at an upper limit cap level. Operation proceeds from sub-step **126** to step **118**, where the wireless communications terminal monitors for an additional base station signal.

Returning to sub-step **128**, in sub-step **128**, the wireless communications terminal adjusts its transmission power to zero and ceases with peer to peer transmissions. Operation proceeds from sub-step **128** to step **104**, where the wireless communications terminal scans for a base station signal.

FIG. **2** is a drawing of an exemplary wireless terminal **2300**, e.g., mobile node supporting peer to peer communications, in accordance with various embodiments. Exemplary wireless terminal **2300** includes a receiver module **2302**, a transmitter module **2304**, a processor **2306**, user I/O devise **2308**, and a memory **2310** coupled together via a bus **2312** over which the various elements may interchange data and information. Memory **2310** includes routines **2322** and data/information **2324**. The processor **2306**, e.g., a CPU, executes the routines **2322** and uses the data/information **2324** in memory **2310** to control the operation of the wireless terminal **2300** and implement methods, e.g., the method of flowchart **100** of FIG. **1**.

Receiver module **2302**, e.g., an OFDM receiver, is coupled to receive antenna **2314** via which the wireless terminal receives signals. Received signals include broadcast signals such as beacon signals transmitted by a base station into a frequency band being utilized for uplink cellular communications by the base station, e.g., during predetermined intervals of time in which the uplink cellular signaling is suspended. Received signals also include peer to peer signals from other wireless terminals operating in a peer to peer mode of operation, said peer to peer signals being communicated using the base station uplink frequency band, at least some of the peer to peer signals being communicated during intervals where uplink cellular communications are active. Receiver module **2302** also includes a tuner module **2316** for selecting the frequency band to be received.

Transmitter module **2304**, e.g., an OFDM transmitter, is coupled to transmit antenna **2318** via which the wireless terminal **2300** transmits peer to peer signals. Wireless transmitter module's **2304** transmission of peer to peer signals is responsive to evaluation of detected signals from the base station. For example, the presence of a detected predetermined base station signal, e.g., a beacon signal which matches a predetermined format, e.g., a specific high power OFDM tone or set of tones in an OFDM symbol, in a potential cellular uplink bandwidth being scanned, in some embodiments, indicates that the uplink band is also available for peer to peer communications usage. Continuing with the example, the received power level of the base station broadcast signal in the uplink bandwidth, in some embodiments, is used by the wireless terminal **2300** to determine maximum allowable peer to peer transmission power. Transmitter module **2304** includes a tuner module **2320** which, in some embodiments, is set to an uplink frequency band being used by a base station. In some embodiments, the tuner module **2320** is set to tune the transmitter **2304** to use some, but not necessarily all of the set of the frequencies being used in an uplink cellular band. For example, the peer to peer communications band, in some embodiments, is a subset of an uplink cellular communications band to which it corresponds. At least some of the transmitted peer to peer signals are transmitted using the same air link resource as is being used for cellular uplink signaling. In some embodiments, the same antenna is used for both receiver module **2302** and transmitter module **2304**. In some embodiments, both tuner modules (**2316**, **2320**) are set to the same band for peer to peer communications, e.g., the same uplink cellular communications band.

User I/O devices **2308** include, e.g., microphones, keyboard, keypad, camera, switches, speaker, display, etc. User I/O devices **2308** allow a user of wireless terminal **2300** to input data/information, access output data/information, and control at least some functions of the wireless terminal **2300**, e.g., initiate a peer to peer communications session.

Routines **2322** include a communications routine **2326** and wireless terminal control routines **2328**. Communications routine **2326** implements the various communications protocols used by the wireless terminal **2300**. Wireless terminal control routines **2328** control the operation of the wireless

terminal **2300** and implement methods. The wireless terminal control routines **2328** include a scanning module **2330**, a signal evaluation module **2332**, a received base station signal power level tracking module **2334**, a power control module **2336** and a peer to peer signaling module **2338**.

Data/information **2324** includes uplink bandwidth data/information **2344**, format information corresponding to a base station broadcast signal which is broadcast into an uplink bandwidth **2350**, recurring schedule information **2352**, tuner setting information **2356**, received base station signal at time t**0** **2358**, received base station signal (t**0**) power level information **2360**, received base station signal at time t**1** **2362**, received base station signal (t**1**) power level information **2364**, power level change information **2366**, generated peer to peer signal **2368**, and peer to peer signal transmission power level information **2370**.

Uplink bandwidth data/information **2344** includes one or more sets of information identifying a set of frequencies (information identifying a first set of frequencies **2346**, . . . , information identifying an Nth set of frequencies **2348**). For example, in different parts of a WAN cellular communication system using FDD a different uplink FDD band is utilized, and information **2346** identifies a first uplink band and a first corresponding tuner setting while information **2348** identifies a different uplink band and a different corresponding tuner setting. For example, information identifying a first set of frequencies **2346** includes information identifying a set of contiguous OFDM tones used as an uplink FDD cellular communications band and which are also utilized for peer to peer communications.

Format information corresponding to a base station broadcast signal which is broadcast into an uplink bandwidth **2350** includes information used to characterize and identify such base station broadcast signals. For example, a particular beacon signal transmitted by a base station into an uplink bandwidth, in some embodiments, places equal amounts of energy on a small set, e.g., 1 to 3, OFDM tones of an OFDM symbol, and transmits the signal at a relatively high power level. Format information **2350** includes, e.g., information identifying sets of tones which correspond to a beacon signal.

Recurring schedule information **2352** includes recurring cellular uplink and downlink schedule information and peer to peer recurring schedule information. Recurring schedule information **2352** includes information identifying predetermined times of base station broadcasts into the uplink bandwidth **2354**. For example, information **2354** includes information identifying when the scanning module **2330** should expect to receive broadcast signals from base stations.

Tuner setting information **2356** includes information identifying the setting of tuner modules **2316** and **2320**. In some embodiments, in responses to a base station broadcast signal being detected in an uplink band being scanned, the wireless terminal **2300** identifies an uplink cellular band also available for peer to peer communications usage, and tuner module **2320** is set to the same setting as to which tuner module **2316** is currently set.

Received base station signal at time t**0** **2358** and received base station signal at time t**1** **2362** correspond to broadcast signals detected by scanning module **2330** at different times. The received base station broadcast signals **2358**, **2362** are evaluated by signal evaluation module **2332** with power measurement module **2342** obtaining received base station signal t(**0**) power level **2360**, received base station signal t(**1**) power level **2364**, respectively. Power level change information **2366** is an output of received base station signal power level tracking module **2334**, and is used as an input by power control module **2336** to control the transmission power level of peer to peer signals.

Scanning module **2330** scans an uplink bandwidth to detect a signal from a base station. For example, scanning module **2330** scans a base station uplink bandwidth, e.g., a base station uplink bandwidth which is a FDD band for cellular communications, to search to detect for the presence of a broadcast signal, e.g., a beacon signal, transmitted by a base station into the uplink bandwidth. In some embodiments, if the scanning module **2330** fails to detect the presence of a base station broadcast signal in an uplink bandwidth being scanned the scanning module **2330** switches to an alternative potential uplink band to scan. In various embodiments, the scanning module continues to monitor for additional base station signals after detecting the presence of a first broadcast signal from the base station and after transmitting a peer to peer signal.

Signal evaluation module **2332** evaluates the detected signal from the base station. Signal evaluation module **2332** includes a transmission pattern evaluation module **2340** and a power measurement module **2342**. Transmission pattern evaluation module **2340** evaluates a transmission pattern of the base station signal. For example, transmission pattern evaluation module **2340** attempts to match a detected pattern such as a set of detected tones in a received OFDM symbol having a high relative power level with stored information characterizing an anticipated signal. In some embodiments, the pattern includes a sequence of tone sets which change, e.g., hop over time in accordance with a predetermined pattern. Power measurement module **2342** measures the power level of the signal from the base station, e.g., the power level of the beacon signal from the base station which has been transmitted in the uplink band. In some embodiments, the beacon signal is a signal including less than 3 tones in an OFDM symbol. In various embodiments, the wireless terminal continues to evaluate additional detected signals from the base station, e.g., measuring the power level of the additional received broadcast signals.

Received base station signal power level tracking module **2334** calculates changes in the received power level of detected broadcast signals from the base station. Power control module **2336** controls the transmission power level of peer to peer signals transmitted by wireless terminal **2300** as a function of received base station broadcast signal power measurement information and/or changes in received base station broadcast signal power level information. For example, the power control module **2336** adjusts peer to peer transmission power in response to detecting a difference between the received power of successive received base station broadcast signals. At times, power control module **2336** reduces peer to peer transmission power, said reduction being responsive to continued monitoring of the base station signaling.

Peer to peer signaling module **2338** generates peer to peer signals **2368** and controls transmitter module **2304** to transmit such signals at a power level in accordance with the peer to peer signal transmission power level **2370**. The peer to peer transmission power level is an output of power control module **2336**.

FIG. **3** is a flowchart **200** of an exemplary method of operating a base station, in accordance with various embodiments. Operation starts in step **202**, where the base station is powered on and initialized and proceeds to step **204**.

In step **204**, the base station receives, during a first period of time uplink signals from cellular communications devices

transmitting to said base station in an uplink frequency band. Operation proceeds from step **204** to step **206**.

In step **206**, the base station transmits during a second period of time. Step **206** includes sub-steps **208** and **210**, which may be, and sometimes are, performed in parallel. In sub-step **208**, the base station transmits to at least some of said cellular communications devices using a second frequency band which is different from said first frequency band, said second frequency band being a downlink frequency band. In sub-step **210**, the base station transmits a broadcast signal in said uplink frequency band. In some embodiments, the broadcast signal transmitted into said uplink frequency band is a beacon signal, e.g., an OFDM beacon signal including less than 3 OFDM tones in an OFDM symbol. In some embodiments, the broadcast signal transmitted into said uplink frequency band is a power transmission level control signal.

In some embodiments, the uplink signals from cellular communications devices are received during the first period of time in the presence of peer to peer communications signals transmitted into said uplink frequency band which interfere with said uplink signals. Thus the uplink frequency band is also concurrently utilized for peer to peer signaling.

FIG. **4** is a drawing of an exemplary base station **2400** in accordance with various embodiments. Exemplary base station **2400** is, e.g., part of a WAN cellular communications system and uses an FDD uplink band and a FDD downlink frequency band. Continuing with the example, the base station **2400** also transmits a broadcast signal, e.g., a beacon signal, into the uplink communications band to support peer to peer communications. In some embodiments, the base station's implemented recurring timing structure intentionally suspends uplink signaling from cellular communications devices during predetermined intervals in which the base station **2400** transmits broadcast signals into the uplink communications band. In some such embodiments, the relative time allocated to the base station **2400** broadcast signals into the uplink band with respect to time allocated to uplink wireless terminal cellular signaling directed to the base station into the uplink band is less than or equal to 2%. In various embodiments, the uplink communications band is allowed to be utilized for peer to peer signaling concurrently with cellular uplink communications. In some such embodiments, the base station **2400** manages the interference from the peer to peer devices, and the interference management includes varying the transmission power level of the broadcast signal transmitted into the uplink communications band. Peer to peer devices receiving the broadcast signal control their transmission power levels as a function of the received power level of the base station broadcast signal into the uplink communications band.

Base station **2400** includes a receiver module **2402**, a transmitter module **2404**, a processor **2406**, an I/O interface **2408**, and memory **2410** coupled together via a bus **2412** over which the various elements may exchange data and information. Memory **2410** includes routines **2418** and data/information **2420**. The processor **2406**, e.g., a CPU, executes the routines **2418** and uses the data/information **2420** in memory **2410** to control the operation of the base station and implement methods, e.g., the method of flowchart **200** of FIG. **3**.

Receiver module **2402**, e.g., an OFDM receiver, is coupled to receive antenna **2414** via which the base station **2400** receives during a first period of time uplink signals from cellular communications devices transmitting to the base station **2400** in an uplink frequency band. Uplink signals from cellular communications devices are received during the first period of time in the presence of peer to peer communications signals transmitted in the uplink frequency band which interfere with the uplink signals.

Transmitter module **2404**, e.g., an OFDM transmitter, is coupled to transmit antenna **2416**, via which the base station **2400** transmits to at least some of the cellular communications devices using a downlink frequency band and for transmitting a broadcast signal during a second period of time in said uplink frequency band, wherein said downlink frequency band is different from said uplink frequency band and wherein said first period of time and said second period of time are non-overlapping. Downlink signals intended for cellular communications devices include, e.g., downlink band beacon signals, assignment signals, paging signals and traffic signals. In some embodiments, the transmitter module **2404** includes a first transmitter sub-module **2405** and a second transmitter sub-module **2407**. For example, first transmitter sub-module **2405** is used for downlink cellular signaling, and the second transmitter sub-module **2407** is used for transmitting a broadcast signal such as beacon signal into an uplink frequency band.

One advantage of an implementation using individual first and second transmitter sub-module **2405**, **2507** is that first transmitter sub-module **2405** can be set to transmit on a downlink FDD band and need not have to accommodate the UL TDD band into which the broadcast signal used for peer to peer support is communicated. For example, receiver module **2402** and second transmitter sub-module **2407** can be tuned to the same UL FDD band, while first transmitter module **2405** can be tuned to a DL FDD band, and downlink cellular communications can continue in an uninterrupted manner. Another advantage of this approach is that an existing base station supporting cellular communications can be adapted to support peer to peer communications utilizing the same uplink FDD band by insertion of second transmitter sub-module **2407** into the base station along with some software modifications, e.g., to alter the uplink timing structure to suspend uplink cellular communications during the brief intervals of base station signaling into the uplink frequency band.

I/O interface **2408** couples the base station **2400** to other network nodes, e.g., other base stations, AAA nodes, home agent nodes, and/or the Internet. I/O interface **2408**, by coupling base station **2400** to a backhaul network, allows a cellular communications device using base station **2400** as its point of network attachment to participate in a communications session with another cellular communications device using a different base station as its point of network attachment.

Routines **2418** include a communications routine **2422**, a broadcast signal, e.g., beacon signal, generation module **2424**, a peer to peer interference management module **2426**, a cellular downlink module **2428** and a cellular uplink module **2430**. Communications routine **2422** implements the various communications protocols used by the base station **2400**. Broadcast signal generation module **2424** generates broadcast signals used by cellular communications devices and peer to peer communications devices. In some embodiments, at least some of the downlink band broadcast signals, e.g., downlink band beacon signals, generated by module **2424** convey base station identification information, e.g., cell, sector, and/or attachment point information. In some embodiments, at least some of the uplink band broadcast signals, e.g., uplink band beacon signals, generated by module **2424** are transmission power level control signals, e.g., a signal used to control a peer to peer device's maximum transmission power level.

In some embodiments, the broadcast signal generation module **2424** includes an uplink band beacon signal generation module **2432** for generating a beacon signal to be transmitted into an uplink frequency band and a downlink band beacon signal generation module **2434** for generating a beacon signal to be transmitted into a downlink frequency band. In various embodiments, the uplink band beacon signal generation module **2432** includes a power level module **2436** for setting the transmission power level of the beacon signal into the uplink band as a function of information received from the peer to peer interference management module **2426**. In some embodiments, the downlink band beacon signal generation module **2434** includes a base station identification module **2438** for incorporating base station identification information into the downlink band beacon signal. In some embodiments, a generated downlink band beacon signal corresponding to a base station attachment point is transmitted at the same transmission power level, while the transmission power level of a generated uplink band beacon signal is transmitted at different power levels at different times, e.g., as part of the management of peer to peer signaling which is causing interference with regard to base station receiver **2402** reception of cellular communication uplink signals.

Peer to peer interference management module **2426** manages peer to peer signaling interference levels being experienced at receiver module **2402** by operations including setting a power level for a broadcast signal, e.g., a beacon signal, to be transmitted into the uplink frequency band. In some embodiments, the peer to peer interference management module **2426** determines to increase the power level of the transmitted broadcast signal into the uplink band when it desires to reduce levels of interference from peer to peer signaling, and decreases the power level of the transmitted broadcast signal into the uplink band when it desires to allow increased levels of interference from peer to peer signaling.

Cellular downlink module **2428** controls the generation and transmission of downlink signals directed to cellular devices **2450**. Cellular uplink module **2430** controls the reception of uplink signals from cellular communications devices and the recovery of information from those signals obtaining received uplink signals from cellular devices **2448**.

Data/information **2420** includes time/frequency structure information **2440**, broadcast signal format information **2442**, a generated broadcast signal to be transmitted into the uplink band **2444**, a generated broadcast signal **2446** to be transmitted into the downlink band **2446**, received uplink signals from cellular devices **2448**, and downlink signals directed to cellular devices **2450**. Time/frequency structure information **2440** includes recurring time structure information **2452**, uplink frequency band information **2454** and downlink frequency band information **2456**. Recurring time structure information **2452** includes information identifying time intervals for uplink signals **2458** and information identifying time intervals used for base station broadcast signals into the uplink band **2460**. Information identifying time intervals for uplink signals **2458** includes, e.g., information identifying access intervals and information identifying intervals used for at least one of uplink control signaling and uplink traffic signaling. Information identifying time intervals for base station broadcast signals into the uplink band **2460** identifies intervals used for base station transmission of broadcast signals, e.g., beacon signals, into an uplink band, during which normal uplink cellular communication signaling is suspended. Thus the base station broadcast signal, e.g., beacon signal, into the uplink frequency band is not interfered with by cellular uplink signals directed to base station **2400**, facilitating recovery of the broadcast signal by peer to peer wireless communications devices. In some embodiments, the ratio of allocation of time to base station broadcast into the uplink band and cellular uplink signaling into the uplink band is less than or equal to 2%.

Uplink frequency band information **2454** includes information identifying a set of frequencies, e.g., a set of contiguous OFDM tones, to be used as a cellular uplink FDD band by the base station **2400** and carrier frequency information corresponding to the band. The uplink frequency band is also to be utilized as a peer to peer communications band with at least some peer to peer communications using the same air link resources as uplink cellular communications. The base station **2400** also transmits a broadcast signal into the uplink communications band. Downlink frequency band information **2456** includes information identifying a set of frequencies, e.g., a set of contiguous OFDM tones, to be used as a cellular downlink FDD band by the base station **2400** and carrier frequency information corresponding to the band.

Broadcast signal format information **2442**, e.g., information identifying the format of a beacon signal to be transmitted into an uplink frequency band, includes, e.g., information identifying a set of tones, e.g., 1 to 3 tones, to be used to represent the beacon signal. In some embodiments, a set of tones corresponding to a beacon signal, are hopped over time in accordance with a predetermined hopping sequence and such information is also included in information **2442**.

Generated broadcast signal for uplink band **2444**, e.g., a beacon signal, is an output of broadcast signal generation module **2424**. For some embodiments, information **2444** is an output of uplink band beacon signal generation module **2432**. Generated broadcast signal for downlink band **2444**, e.g., a beacon signal, is an output of broadcast signal generation module **2424**. For some embodiments, information **2446** is an output of downlink band beacon signal generation module **2434**.

FIG. **5** is a flowchart **700** of an exemplary method of operating a wireless communications device which supports peer to peer signaling in accordance with various embodiments. Operation starts in step **702**, where the wireless communications device is powered on and initialized and proceeds to step **704**, where the wireless communications device receives a first signal from a base station. In some embodiments, the first signal is received in an uplink frequency band used to transmit uplink signals to the base station. In some other embodiments, the first signal is received in a frequency band which is a downlink frequency band used by said base station and peer to peer signals are transmitted in another frequency band. In such an embodiment, the another frequency band used for peer to peer signaling may be, and sometimes is, an uplink frequency band used to transmit uplink signals to the base station. The approach of using the uplink frequency band to convey the first signal from the base station has the advantage that a peer to peer wireless communications device can remain on the same frequency band used for peer to peer signals and still be able to monitor for the first signal from the base station. This facilitates a simple design and/or low cost implementation for the peer to peer wireless communications device. However, there is additional complexity at the base station since it now transmits into a band it did not previously use for transmissions.

Alternatively, the approach of using the downlink band of the base station to convey the first signal is easier from the base station's perspective; however, the peer to peer wireless communications device requires additional complexity and/or cost since it needs to monitor two bands, e.g., involving multiple receivers and/or the complexity involved in switching between bands.

Operation proceeds from step **704** to step **706**. In step **706**, the wireless communications device performs a measurement on the received signal, e.g., a signal power measurement. Operation proceeds to one or more of steps **708** and **722**. In some embodiments, the wireless communications device supports peer to peer signaling, but does not support uplink signaling to the base station, e.g., as part of a cellular network, and in such embodiments, step **722** is not an option. In some embodiments, the wireless communications device supports, at any given time one of a peer to peer mode and a cellular mode of operation, and for a given time, operation can proceed to one of step **708** and step **722**. In some embodiments, the wireless communications device supports concurrent peer to peer signaling and cellular signaling and operation may proceed from step **706** to steps **708** and step **722**.

Operation proceeds from step **706** to step **708** for peer to peer signaling, while operation proceeds from step **706** to step **722** for uplink signals to the base station. In step **708**, the wireless communications device controls peer to peer transmission power for at least some peer to peer signal transmissions as a function of the result of the measurement of the first signal. Step **708** includes sub-steps **710** and **712**. In sub-step **710**, the wireless communications device uses a first function, which limits peer to peer transmission power to a lower level for a first received signal power level than for a second received signal power level which is higher than said first received signal power level, to determine a maximum transmission permitted peer to peer transmission power level. Then, in sub-step **712**, the wireless communications device determines an actual peer to peer transmission power level as a function of the determined maximum peer to peer transmission power level and a peer to peer signal received from a second peer to peer communications device. The second peer to peer communications device is, e.g., the peer device with which the communications device performing the operations of flowchart **700** is having a peer to peer communications session. Thus, the peer to peer transmission power level, in some embodiments, is influenced by both a received base station signal and a peer to peer signal. The peer to peer signal, in some embodiments, communicates and/or is used to derive at least one of: peer to peer channel condition information, peer to peer data rate information, peer to peer data backlog information, peer to peer latency information, noise information, error rate information, service level information and peer to peer power control information. In some embodiments, the actual peer to peer transmission power is restricted to be equal to or below the determined maximum peer to peer transmission power level. In some embodiments, for at least some conditions, e.g., a high priority user or a certain service level, the actual peer to peer transmission level can sometimes exceed, e.g., override, the determined maximum peer to peer transmission power level which is based on the received base station signal. Operation proceeds from step **708** to step **714**.

In step **714**, the wireless communications device receives a second signal from the base station at a time which is different from the time at which said first signal is received. Then, in step **716**, the wireless communications device performs a measurement of the received second signal, e.g., a power measurement of the received second signal. Operation proceeds from step **716** to step **718**, in which the wireless communications devices determines from the measured power of the second received signal that the wireless communications device should refrain from transmitting peer to peer communications signals. Operation proceeds from step **718** to step **720**. In step **720**, the wireless communications device refrains from transmitting peer to peer communications signals after determining that the communications device should refrain from transmitting peer to peer communications signals until determining from measuring the power of another signal from the base station that the wireless communications device is permitted to transmit peer to peer signals.

Returning to step **722**, in step **722**, the wireless communications device controls transmission power of a signal transmitted to a transmission power level which is greater than said peer to peer transmission power level used for at least some peer to peer signal transmissions. Step **722** includes sub-step **724**. In sub-step **724**, the wireless communications device uses a second function when controlling transmission power to said base station to determined the transmission power of said signal transmitted to said base station based on the measured power of the received first signal, said second function being different from said first function. In some embodiments, the peer to peer transmission signal power level is at least 10 dBs below the transmission power level of the said signal transmitted to the base station.

FIG. **6** is a drawing of an exemplary wireless communications device **2900**, e.g., wireless terminal such as a mobile node, supporting peer to peer communications in accordance with various embodiments. Exemplary communications device **2900** can, and sometimes does, use a WAN uplink band in which to conduct peer to peer communications. Exemplary wireless communications device **2900** receives a signal from a base station which it utilizes in determining whether or not it is permitted to transmit peer to peer signals into the base station's uplink band and/or peer to peer transmission power level information, e.g., a maximum peer to peer transmission power level.

Wireless communications device **2900** includes a receiver module **2902**, a transmitter module **2904**, user I/O devices **2908**, a processor **2906**, and memory **2910** coupled together via a bus **2912** over which the various elements may interchange data and information. Memory **2910** includes routines **2918** and data/information **2920**.

The processor **2906**, e.g., a CPU, executes the routines **2918** and uses the data/information **2920** in memory **2910** to control the operation of the wireless communications device **2900** and implement methods.

Receiver module **2902**, e.g., an OFDM receiver, is coupled to receive antenna **2914** via which the wireless communications device **2900** receives a signal from a base station, said received signal used in determining peer to peer transmission power level information. Receiver module **2902** also receives peer to peer communications signals. In some embodiments, during some times, receiver module **2902** receives downlink signals, e.g., assignment signals and traffic signals, from a base station that the wireless communications device is using as a point of attachment in a wide area network, with the communications device **2900** functioning as a cellular communications device.

Transmitter module **2904**, e.g., an OFDM transmitter, is coupled to transmit antenna **2916**, via which the wireless communications device **2900** transmits peer to peer signals to other wireless communications devices. In some embodiments, during some time intervals, the transmitter module **2904** transmits uplink signals to a base station, with the wireless communications device functioning in a WAN mode of operation, e.g., a cellular mode of operation.

User I/O devices **2908** include, e.g., microphone, keyboard, keypad, mouse, camera, switches, speaker, display, etc. User I/O devices **2908** allow a user of wireless communications device **2900** to input data/information, access output data/information, and control at least some functions of the wireless communications device **2900**, e.g., attempt to initiate a peer to peer communications session.

Routines **2918** includes a communications routine **2922** and wireless terminal control routines **2924**. The communications routine **2922** implements the various communications protocols used by the wireless communications device **2900**. Wireless terminal control routines **2924** include a measurement module **2926**, an authorization module **2940**, peer to peer transmission control module **2941** and a peer to peer transmission power control module **2928**. In some embodiments, e.g., an embodiment supporting both peer to peer communications and WAN communications, e.g., cellular communications, the wireless terminal control routines **2924** include a wide area network transmission power control module **2936**.

Measurement module **2926** performs a measurement on a received signal from a base station. Signals (**2942**, **2944**) represent inputs to measurement module **2926** while information (**2946**, **2948**) represents outputs of measurement module **2926**. In various embodiments, the measurement of measurement module **2926** is a signal power measurement.

Authorization module **2940** can, and sometimes does, determine from the measured power of a received base station signal that the wireless communications device **2900** should refrain from transmitting peer to peer signals. Authorization module **2940** can, and sometimes does, determine from the measured power of a received base station signal that the wireless communications device **2900** is permitted to transmit peer to peer signals. Peer to peer transmission authorization status **2950** is an output of authorization module **2940** and is used as an input by peer to peer transmission control module **2941**.

Peer to peer transmission control module **2941** controls the wireless transmitter module **2904** to refrain from transmitting peer to peer communications signals after determining that the communications device **2900** should refrain from transmitting peer to peer signals until determining that the wireless communications device **2900** is permitted to transmit peer to peer signals. Thus peer to peer transmission control module **2941**, using peer to peer transmission authorization status **2950**, functions as a peer to peer transmit enable/disable controller.

Peer to peer transmission power control module **2928** controls peer to peer transmission power for at least some peer to peer signal transmissions as a function of the result of a measurement of a received base station signal. Peer to peer transmission power control module **2928** includes a maximum peer to peer transmission power level determination sub-module **2930**, an actual peer to peer transmission power level determination sub-module **2932** and a first function **2934**. The peer to peer transmission power control module **2928** uses the first function **2934** which limits peer to peer transmission power to a lower level for a first received signal power level than for a second received signal power level which is higher than said first received signal power level. In various embodiments, the peer to peer transmission power control module **2928** limits peer to peer transmission power to lower levels in response to greater measured received signal power levels.

Maximum peer to peer transmission power level sub-module **2930** uses the first function **2934** to determine a maximum peer to peer transmission power level. Actual peer to peer transmission power level sub-module **2932** determines an actual peer to peer signal transmission power level as a function of said maximum peer to peer transmission power level and a peer to peer signal received from a second peer to peer communications device. In various embodiments, sub-module **2932** controls the actual determined peer to peer transmission power level to be less than or equal to the maximum peer to peer transmission power level.

Wide area network transmission power control module **2936** controls transmission power of a signal transmitted to the base station to a transmission power level which is greater than said peer to peer transmission power level used for at least some peer to peer signal transmission. WAN transmission power control module **2936** includes a second function **2938** which is different from the first function **2934**. The wide area network transmission power control module **2936** control of transmission power of a signal transmitted to said base station includes using the second function **2938** which is different from the first function **2934** to determine the transmission power level of a signal transmitted to the base station based on the measured received power level of a signal from the base station.

For example, received base station signal N **2944** is measured by measurement module **2926** obtaining signal N measurement information **2948** which is input to both peer to peer transmission power control module **2928** and WAN transmission power control module **2936**. Peer to peer module **2928** uses first function **2934** to process input **2848** and obtains a determined maximum peer to peer transmission power level **2952**, while WAN module **2936** processes the same input **2948** using the second function **2938** and obtains a determined maximum WAN transmission power level **2956** which is a higher level than the determined maximum peer to peer transmission power level **2952**.

In various embodiments, the peer to peer transmission signal power level is at least 10 dBs below the transmission power level of the signal transmitted to the base station. For example, determined maximum peer to peer transmission power level **2952** is a least 10 dBs below determined maximum WAN transmission power level **2956** for the same value of measured base station signal. As another example, in some embodiments, if a wireless terminal is at a location and has determined peer to peer transmission power level information and WAN transmission power level information based on the same received base station signal measurement, the determined actual peer to peer transmission power level **2954** is at least 10 dBs below the determined actual WAN transmission power level **2958**.

Data/information **2920** includes a plurality of received signals from a base station which are measured and utilized in determining transmission power level information (received base station signal **1 2942**, . . . , received base station signal N **2944**), a plurality of corresponding signal measurement information (signal **1** measurement information **2946**, . . . , signal N measurement information **2948**), respectively. Data/information **2920** also includes peer to peer transmission authorization status information **2950** which indicates whether or not the wireless communications device **2900** is currently allowed to transmit peer to peer signals. Data/information **2920** also includes a determined maximum peer to peer transmission power level **2952** which is the output of sub-module **2930** and a determined actual peer to peer transmission power level **2954** which is the output of sub-module **2932**.

Timing/frequency structure information **2960**, included as part of data/information **2920**, includes uplink frequency band information **2962**, e.g., WAN uplink bandwidth information, WAN uplink carrier information and uplink WAN tone set information, downlink frequency band information **2964**, e.g., WAN downlink bandwidth information, WAN downlink carrier information and downlink WAN tone set information, and information identifying the location of the measured base station signals **2966**. In this exemplary embodiment peer to peer communications signaling uses a

WAN uplink frequency band being used by a base station with the peer to peer signals acting as interference to the WAN uplink signals directed to the base station. The signal, which is received by wireless communications device **2900**, is measured, and the measurement is utilized to control wireless communications device peer to peer transmission power level; in some embodiments, the signal is communicated in the WAN uplink band, while in other embodiments, the signal is communicated in the WAN downlink band. Information **2966** identifies which WAN band carries this signal, and in some embodiments, identifies more specific information corresponding to the signal, e.g., a point in a recurring timing structure and/or specific tone information used to identify the signal.

In various embodiments in which the wireless communications device **2900** supports WAN communications, e.g., cellular communications, data/information **2920** also includes determined maximum WAN transmission power level information **2956** and determined actual WAN transmission power level information **2958**, which are outputs of WAN transmission power control module **2936**.

FIG. **7** comprising the combination of FIG. **7**A and FIG. **7**B is a flowchart **800** of an exemplary method of operating a wireless communications device supporting peer to peer communications in accordance with various embodiments. Operation starts in step **802**, where the wireless communications device is powered on and initialized and proceeds to step **804**, where the wireless communications device receives a first signal from a base station. In some embodiments, the first signal is received in an uplink frequency band used to transmit uplink signals to the base station. In some other embodiments, the first signal is received in a frequency band which is a downlink frequency band used by said base station and peer to peer signals are transmitted in another frequency band. In such an embodiment, the another frequency band used for peer to peer signaling may be, and sometimes is an uplink frequency band used to transmit uplink signals to the base station.

Operation proceeds from step **804** to step **806**. In step **806**, the wireless communications device performs a measurement on the received signal, e.g., a signal power measurement. Operation proceeds from step **806** to step **808**.

In step **808** the wireless communications device determines a transmission power level control parameter. In one exemplary embodiment step **808** includes sub-steps **810** and **812**. In another exemplary embodiment step **808** includes sub-step **814** and **816**. In still another exemplary embodiment step **808** includes sub-steps **814** and **818**.

In sub-step **810**, the wireless communications device accesses memory, including stored transmission power level control parameters corresponding to different service levels, and then in sub-step **812** the wireless communications device retrieves a stored transmission power corresponding to a service level corresponding to said wireless communications device.

In sub-step **814**, the wireless communications device recovers a control value from a signal received by said wireless communications device from said base station. In some embodiments, the signal from which the control value is recovered is the first signal which was received in step **804**. Operation proceeds from sub-step **814** to one of sub-steps **816** and **818**. In sub-step **816**, the wireless communications device uses the recovered control value as the transmission power level control parameter. Alternatively, in sub-step **818**, the wireless communications device calculates the transmission power level control parameter based on the recovered control value and a service level corresponding to the wireless terminal.

Operation proceeds from step **808** to step **820**. In step **820**, the wireless communications device controls peer to peer transmission power for at least some peer to peer transmissions as a function of the result of the measurement of the first signal, wherein control of peer to peer transmission power includes controlling peer to peer transmission power according to a first function, and wherein controlling peer to peer transmission power according to a first function includes using said determined transmission power level control parameter in said first function in addition to said measured received power level. Operation proceeds from step **820** via connecting node A **822** to step **824**.

In step **824**, the wireless communications device receives a second signal from the base station at a time which is different from the time at which said first signal is received. Then, in step **826**, the wireless communications device performs a measurement of the received second signal, e.g., a power measurement of the received second signal. Operation, proceeds from step **826** to step **828**, in which the wireless communications device determines from the measured power of the second received signal that the wireless communications device should refrain from transmitting peer to peer communications signals. Operation proceeds from step **828** to step **830**. In step **830**, the wireless communications device refrains from transmitting peer to peer communications signals after determining that the communications device should refrain from transmitting peer to peer communications signals until determining from measuring the power of another signal from the base station that the wireless communications device is permitted to transmit peer to peer signals.

FIG. **8** is a drawing of an exemplary wireless communications device **3000**, e.g., wireless terminal such as a mobile node, supporting peer to peer communications in accordance with various embodiments. Exemplary communications device **3000** can, and sometimes does, use a WAN uplink band in which to conduct peer to peer communications. Exemplary wireless communications device **3000** receives a signal from a base station which it utilizes in determining whether or not it is permitted to transmit peer to peer signals into the base station's uplink band and/or in determining peer to peer transmission power level information, e.g., a maximum peer to peer transmission power level.

Wireless communications device **3000** includes a receiver module **3002**, a transmitter module **3004**, user I/O devices **3008**, a processor **3006**, and memory **3010** coupled together via a bus **3012** over which the various elements may interchange data and information. Memory **3010** includes routines **3018** and data/information **3020**.

The processor **3006**, e.g., a CPU, executes the routines **3018** and uses the data/information **3020** in memory **3010** to control the operation of the wireless communications device **3000** and implement methods, e.g., the method of flowchart **800** of FIG. **7**.

Receiver module **3002**, e.g., an OFDM receiver, is coupled to receive antenna **3014** via which the wireless communications device **3000** receives a signal from a base station, said received signal used in determining peer to peer transmission power level information. Receiver module **3002** also receives peer to peer communications signals. Transmitter module **3004**, e.g., an OFDM transmitter, is coupled to transmit antenna **3016**, via which the wireless communications device **3000** transmits peer to peer signals to other wireless communications devices.

User I/O devices **3008** include, e.g., microphone, keyboard, keypad, mouse, camera, switches, speaker, display, etc. User I/O devices **3008** allow a user of wireless communications device **3000** to input data/information, access output data/information, and control at least some functions of the wireless communications device **3000**, e.g., attempt to initiate a peer to peer communications session.

Routines **3018** includes a communications routine **3022** and wireless terminal control routines **3024**. The communications routine **3022** implements the various communications protocols used by the wireless communications device **3000**. Wireless terminal control routines **3024** include a measurement module **3026**, a power level control parameter determination module **3028**, a service level identification module **3034** and a peer to peer transmission power control module **3036**.

Measurement module **3026** performs a measurement on a received signal from a base station. Received base station signal **1 3044** represents an input to measurement module **3026** while signal **1** measurement information **3046** represents an output of measurement module **3026**. In various embodiments, the measurement of measurement module **3026** is a signal power measurement.

Power level control parameter determination module **3028** determines a transmission power level control parameter. In some embodiments, the power level control parameter determination module **3028** sets the transmission power level control parameter to the retrieved control parameter **3048**. In some embodiments, the power level control parameter determination module **3028** determines the transmission power level control parameter as a function of the retrieved control parameter **3048**. In some embodiments, the power level control parameter determination module **3028** sets the transmission power level control parameter to the recovered control parameter, e.g., decoded control parameter **3050**. In some embodiments, the power level control parameter determination module **3028** determines the transmission power level control parameter as a function of the recovered control parameter, e.g., decoded control parameter **3050**. In some embodiments, the power level control parameter determination module **3028** determines the transmission power level control parameter as a function of the identified service level **3052**. In some embodiments, the power level control parameter determination module **3028** determines the transmission power level control parameter as a function of the retrieved control parameter **3048** and the recovered control parameter, e.g., decoded control parameter **3050**. In some embodiments, the power level control parameter determination module **3028** determines the transmission power level control parameter by operations including one of: i) using the recovered value as the transmission power level control parameter and ii) calculating the transmission power control parameter based on the recovered control value and a service level corresponding to the wireless terminal.

Service level identification module **3034** identifies a current service level corresponding to the wireless communications device **3000**. For example, some different users of communications device **3000**, in some embodiments, correspond to different service levels, e.g., emergency users, government associated users, service provider users, tier **1** corporate users, tier **2** corporate users, tier **1** private users, tier **2** private users, etc. In other examples, different service levels can correspond to different types of communications devices, different types of data to be communicated, different amounts of data to be communicated and/or different latency considerations. The identified current service level is specified in identified service level **3052**.

Power level control parameter determination module **3028** includes a retrieval module **3030** and a control parameter recovery module **3032**. Retrieval module **3030** retrieves a stored transmission power level control parameter corresponding to a service level corresponding to the wireless communications device **3000**. Thus retrieval module **3030** uses identified service level **3052** as input, accesses service level to power level control parameter mapping information **3060** and obtains the control parameter associated with the input service level. Retrieved control parameter **3048** is an output of retrieval module **3030**.

Control parameter recovery module **3032** recovers a control value from a signal received by the communications device **3000** from a base station. In some embodiments, the control value is recovered from the same signal which is measured by measurement module **3026**, e.g., received base station signal **1 3044**. Decoded control parameter **3050** is an output of control parameter recovery module **3032**. In some embodiments, the recovered control value is an interference level indicator value.

Peer to peer transmission power control module **3036** controls peer to peer transmission power for at least some peer to peer signal transmissions as a function of the result of a measurement of a received base station signal. Peer to peer transmission power control module **3036** includes a maximum peer to peer transmission power level determination sub-module **3038**, an actual peer to peer transmission power level determination sub-module **3040** and a first function **3042**.

Maximum peer to peer transmission power level sub-module **3038** uses the first function **3042** to determine a maximum peer to peer transmission power level. Actual peer to peer transmission power level sub-module **3040** determines an actual peer to peer signal transmission power level as a function of said maximum peer to peer transmission power level and a peer to peer signal received from a second peer to peer communications device. In various embodiments, sub-module **3040** controls the actual determined peer to peer transmission power level to be less than or equal to the maximum peer to peer transmission power level.

Peer to peer transmission power level control module **3036** uses a determined transmission power level control parameter **3054** in addition to a measured received power level, e.g., from signal **1** measurement information **3046** in determining a peer to peer transmission power level, e.g., in determining determined maximum peer to peer transmission power level **3056**. In some embodiments, some or all of the functions of the power level control parameter determination module **3028** are included as part of the peer to peer transmission power control module **3036**.

Data/information **3020** includes a received signal from a base station, received base station signal **1 3044**, which is measured by measurement module **3026** obtaining signal **1** measurement information **3046** which is utilized in determining transmission power level information. Data/information **3020** also includes a transmission power level control parameter **3054**, a determined maximum peer to peer transmission power level **3056**, a determined actual peer to peer transmission power level **3058**, service level to power level control parameter mapping information **3060**, and timing frequency structure information **3070**. In some embodiments data/information **3020** includes one or more of identified service level **3052**, retrieved control parameter **3048** and decoded control parameter **3050**.

Retrieved control parameter **3048** is an output of retrieval module **3030** and corresponds to one of the control parameter values (control parameter value **1 3066**, . . . , control param-

eter value M **3068**) of service level to power control parameter mapping information **3060**. Decoded control parameter **3050** is an output of control parameter recovery module **3032** and represents information recovered from a received base station signal. In some embodiments, the received base station signal from which the information is recovered is the same base station signal which is power measured, e.g., received base station signal **1 3044**. In some embodiments, the recovered control value is an interference level indicator value.

Identified service level **3052** is an output of service level identification module **3034**, and is used as input to retrieval module **3030**. The identified service level **3052** is used to select a corresponding control parameter value. For example, if identified service level **3052** indicates service level M **3064**, then retrieval module **3030** retrieves control parameter value M **3068** which is stored in retrieved control parameter **3048**.

Transmission power level control parameter **3054** is an output of power level control parameter determination module **3028**. Transmission power level control parameter **3054** is determined as a function of one or more of: identified service level **3052**, a retrieved control parameter **3048** and a decoded control parameter **3050**. Transmission power level control parameter **3054** is used as an input by peer to peer transmission power control module **3036**.

Determined maximum peer to peer transmission power level **3056** is an output of maximum peer to peer transmission power level sub-module **3038**, while determined actual peer to peer transmission power level **3058** is an output of actual peer to peer transmission power level determination sub-module **3040**.

Service level to power level control parameter mapping information **3060** includes a plurality of service levels (service level **1 3062**, . . . , service level M **3064**) and a plurality of corresponding control parameter values (control parameter value **1 3066**, . . . , control parameter value M **3068**).

Timing/frequency structure information **3070**, included as part of data/information **3020**, includes uplink frequency band information **3072**, e.g., WAN uplink bandwidth information, WAN uplink carrier information and uplink WAN tone set information, downlink frequency band information **3074**, e.g., WAN downlink bandwidth information, WAN downlink carrier information and downlink WAN tone set information, and information identifying the location of the measured and/or decoded base station signals **3076**. In this exemplary embodiment peer to peer communications signaling uses a WAN uplink frequency band being used by a base station with the peer to peer signals acting as interference to the WAN uplink signals directed to the base station. A signal which is received by wireless communications device **3000** is measured and the measurement utilized to control wireless communications device peer to peer transmission power level. This received base station signal in some embodiments, is communicated in the WAN uplink band, while in other embodiments, the signal is communicated in the WAN downlink band. In some embodiments a signal, which is received by wireless communications device **3000** and decoded recovering information, e.g., recovering an interference indicator value, is also utilized to control wireless communications device peer to peer transmission power level. In some embodiments the same base station signal utilized for power measurement is the decoded signal from which the information is recovered. In some other embodiments, there are two different received signals from the base station, one signal whose received power level is measured and utilized and another signal conveying encoded power control information, e.g., an encoded interference indicator value. The base station signal from which information is recovered, e.g., an interference level indicator value, in some embodiments, is communicated in the WAN uplink band, while in other embodiments the signal is communicated in the WAN downlink band. Information **3076** identifies which WAN band carries the measured base station signal and which WAN band carries the base station signal used for information recovery. In some embodiments, information **3076** identifies more specific information corresponding to the signal or signals, e.g., a point in a recurring timing structure and/or specific tone information used to identify the signal or signals.

FIG. **9** is a drawing **300** illustrating one exemplary embodiment including a communications system **302**, a table **304** describing frequency band usage information and a table **306** illustrating exemplary peer to peer wireless terminal transmission power level information. Exemplary communications system **302** includes a base station **308** with a corresponding cellular coverage area represented by cell **310**. The base station **308** is coupled to other network nodes, e.g., other base stations, routers, AAA nodes, home agent nodes, control nodes, etc., and/or the Internet via network link **309**, e.g., a fiber optic link. In communications system **302** there are also a plurality of wireless terminals supporting cellular communications (WT **1 312**, . . . , WT N **314**). Cellular WTs (**312**, **314**) are coupled to base station **308** via wireless links (**316**, **318**), respectively.

In communications system **302** there are also a plurality of wireless terminals supporting peer to peer communications (WT **1'**, WT **2' 328**, WT **3'**, WT **4' 340**). WT**1'** is shown at two points in time and is represented as element **324** at time t**0** and as element **326** at time t**1**. WT **1'** motion is indicated by arrow **334**. WT**3'** is shown at two points in time and is represented as element **336** at time t**0** and as element **338** at time t**1**. WT **3'** motion is indicated by arrow **346**. Peer to peer communications between WT**1'** and WT**2' 328** are indicated by arrows **330** and **332**. Peer to peer communications between WT**3'** and WT**4' 340** are indicated by arrows **342** and **344**.

The base station transmits a beacon signal **320** into the uplink band. The beacon signal is detected and measured by the peer to peer wireless terminals. A power measurement of the received beacon signal is used by a peer to peer wireless terminal to determine whether the wireless terminal is allowed to transmit peer to peer signals and to control the transmission power level, e.g., the maximum transmission power level, when transmission is permitted. Dotted arrow circle **322** around base station **308** indicates an exemplary peer to peer restricted region, where a peer to peer wireless terminal is restricted from transmitting signals. In the region close to the base station **308**, transmissions from peer to peer wireless terminals at levels utilized in the peer to peer signaling can produce too much interference from the perspective of the base station receiver attempting to recover and decode uplink signals from wireless terminals operating in a cellular mode (**312**, . . . **314**), and thus peer to peer wireless terminal transmissions are not permitted.

Frequency band information table **304** will now be described. First column **348** indicates that frequency band A is used as cellular downlink band for signals transmitted from the base station intended to be received by cellular wireless terminals. Second column **350** indicates that frequency band B is used as: (i) a cellular uplink band for signals transmitted from cellular wireless terminals intended to be received by the base stations; (ii) as a band to convey a peer to peer beacon signal transmitted by the base station and intended to be received and used by peer to peer wireless terminals; and (iii)

as a peer to peer band intended to be used for signals transmitted from and intended to be received by peer to peer wireless terminals.

Peer to peer wireless terminal power information table **306** will now be described. First column **352** identifies the exemplary peer to peer wireless terminals (WT **1'**, WT **2'**, WT **3'**, WT **4'**) being described. Second column **354** identifies points in time, either t**0** or t**1**. Third column **356** identifies transmission power level information corresponding to the wireless terminal on the same row corresponding to the time indicated on the same row. The information of table **306** indicates that the transmission power level for WT**1'** increases from time t**0** to time t**1**. It may be observed that WT**1'** moves away from the base station **308** during this time and that the measured power level of beacon signal **320** from WT**1'**'s perspective can be expected to decrease during this time. It may also be observed that WT **1'** remains outside the restricted zone **322** during this time. The information of table **306** also indicates that the transmission power level for WT**3'** decreases from time t**1** to time t**0**. It may be observed that WT**3'** moves toward the base station **308** during this time and that the measured power level of beacon signal **320** from WT**3'**'s perspective can be expected to increase during this time. It may also be observed that WT **3'** remains outside the restricted zone **322** during this time. The power level described in table **306** can be a maximum allowable transmission power level for the wireless terminal. Alternatively, the power level described in table **306** can be an actual transmission power level.

In some embodiments, at least some wireless terminals support multiple modes of operation, e.g., a peer to peer and a cellular communications mode of operation.

FIG. **10** is a drawing of an exemplary wireless communications system **400** in accordance with various embodiments. Exemplary wireless communications system **400** includes at least one base station **402**, a plurality of wireless terminals supporting peer to peer communications (wireless terminal **1 404**, . . . , wireless terminal N **410**), a plurality of wireless terminals supporting wide area network signaling (wireless terminal **2 406**, . . . , wireless terminal n **412**), and a plurality of wireless terminals supporting both peer to peer signaling and wide area network signaling (wireless terminal **3 408**, . . . , wireless terminal M **414**).

Base station **402** includes a peer to peer interference management module **416**, an interference signal measurement module **418**, and a transmitter module **420**. The peer to peer interference management module **416** determines a peer to peer transmission power level control value. Transmitter module **420** transmits the determined peer to peer transmission power level control value, e.g., as a communicated indicator value. Interference signal measurement module **418** measures signal interference during a null uplink transmission period and supplies the measured signal interference information to the peer to peer interference management module **416**.

Wireless terminal **1 404** includes a received signal power measurement module **422**, a peer to peer signal transmission power control module **424**, a difference updating module **426** and memory **428**. Memory **428**, in some embodiments, includes stored predetermined difference indicator information **430**. The stored predetermined difference indicator information **430** includes a plurality of indicators which can be signaled by a base station (indicator **1 442**, . . . , indicator N **444**) and corresponding difference values (difference **1 446**, . . . , difference N **448**), respectively.

Received signal power measurement module **422** measures the power of a signal received from a base station, e.g., from base station **402**. Peer to peer signal transmission power control module **424** controls a peer to peer signal transmission power level as a function of the measured power of the signal from the base station in accordance with a first function. In various embodiments, the peer to peer signal transmission power level is a maximum permitted peer to peer signal transmission power level. Difference updating module **426** receives a difference indicator value from a base station, e.g., base station **402** and updates the first function based on the received indicator value. In some embodiments, the difference is a predetermined amount and memory **428**, which stores indicators and corresponding predetermined differences, is accessed and the accessed value used by the first function.

Wireless terminal **2 406** includes a received signal power measurement module **432**, and a wide area network signal transmission power control module **434**. Received signal power measurement module **432** measures the power level of signals received from a base station, e.g., base station **402**. Wide area network signal transmission power control module **434** controls wide area signal transmission power level with respect to wireless terminal **2 406** as a function of the measured power of a signal received from the base station in accordance with a second function, the second function being different than the first function. In some embodiments the wide area signal transmission power level is a maximum wide area signal transmission power level. In various embodiments, the second function determines a higher transmission power level than the first function for a given value of the measured received signal power. In some such embodiments, the difference in dBs between the transmission power determined by the first and second function for a given value of the measured received signal power is at least 10 dBs.

Wireless terminal **3 408** includes a received signal power measurement module **436**, a peer to peer signal transmission power control module **438**, and a wide area network signal transmission power control module **440**. Received signal power measurement module **436** measures the power level of a signal received from a base station. Peer to peer signal transmission power control module **438** controls a peer to peer signal transmission power level as a function of the measured power of the signal from a base station in accordance with a first function. Wide area network signal transmission power control module **440** controls wide area signal transmission power level as a function of the measured power of a signal from the base station in accordance with a second function, said second function being different from said first function. In various embodiments, the second function used by module **440** determines a higher transmission power level than the first function used by module **438** for a given value of the measured received signal power. In some such embodiments, the difference in dBs between the transmission power determined by the first and second function for a given value of the measured received signal power is at least 10 dBs. In some embodiments, the first function used by module **438** of WT **3 408** is the same as the first function used by module **424** of WT **1 404**. In some embodiments, the second function used by module **440** of WT **3 408** is the same as the second function used by module **434** of WT **2 406**.

FIG. **11** is a flowchart **500** of an exemplary method of operating a base station in accordance with various embodiments. Operation of the exemplary method starts in step **502** and proceeds to step **504**. In step **504**, the base station stores interference budget information. Operation proceeds from step **504** to steps **506** and step **508**.

In step **508**, which is performed on an ongoing basis, the base station is operated to maintain synchronization with at least one adjacent base station to maintain synchronization of

uplink null time periods between adjacent base stations. In various embodiments, an uplink null time period is a period of time in which at least a fraction of uplink bandwidth used by the base station is intentionally not used for transmitting uplink signals to the base station.

Returning to step **506**, in step **506**, the base station measures during an uplink null time period background interference. Then, in step **510**, the base station determines a first uplink transmission power control value as a function of the measured background interference. Step **510** includes sub-step **512**. In sub-step **512**, the base station uses the stored interference budget information in combination with said measured background interference to generate the first uplink transmission power control value. Sub-step **512** includes sub-steps **514**, **516**, **518**, and **520**. In sub-step **514**, the base station determines if the measured background interference exceeds an interference budget limit indicated by the stored interference budget information. If the budget limit is exceeded, then operation proceeds from sub-step **514** to sub-step **516**; otherwise operation proceeds from sub-step **514** to sub-step **518**.

In sub-step **516**, the base station modifies a previous uplink transmission power control value, said modified transmission power control value limiting peer to peer transmission power levels more than the previous uplink transmission power control value. Returning to sub-step **518**, in sub-step **518**, the base station determines if the measured background interference is below said interference budget limit indicated by stored interference budget information, e.g., lower by at least a predetermined threshold value. If it is determined in sub-step **518**, that the measured background interference is below the interference budget limit such as to satisfy the test criteria, then operation proceeds from sub-step **518** to sub-step **520**. In sub-step **520**, the base station modifies the previous uplink transmission power control value, said modified transmission power control value increasing peer to peer transmission power levels to a level higher than the levels controlled by the previous transmission power control value.

Operation proceeds from step **510** to step **522**, in which the base station transmits said determined first uplink transmission power control value.

FIG. **12** is a flowchart **600** of an exemplary method of operating a base station in accordance with various embodiments. Operation of the exemplary method starts in step **602** and proceeds to step **604**. In step **604**, the base station stores interference budget information. Operation proceeds from step **604** to steps **606** and step **608**.

In step **608**, which is performed on an ongoing basis, the base station is operated to maintain synchronization with at least one adjacent base station to maintain synchronization of uplink null time periods between adjacent base stations. In various embodiments, an uplink null time period is a period of time in which at least a fraction of uplink bandwidth used by the base station is intentionally not used for transmitting uplink signals to the base station.

Returning to step **606**, in step **606**, the base station measures during a first uplink null time period of time background interference. Then, in step **610**, the base station determines a first uplink transmission power control value as a function of the measured background interference. Operation proceeds from step **610** to step **612**. In step **612**, the base station transmits said determined first uplink transmission power control value. Operation proceeds from step **612** to step **614**.

In step **614**, the base station measures during a second uplink null time period background interference, and then in step **616**, the base station determines a change in the measured background interference from the measurements corresponding to the first uplink null period and the second uplink null period. Operation proceeds from step **616** to step **618**.

In step **618**, the base station determines a second uplink transmission power control value as a function of the measured background interference corresponding to the second uplink null period and the determined change in measured background interference, and then in step **620**, the base station transmits the determined second uplink transmission power control value. Operation proceeds from step **620** to step **622**.

In step **622**, the base station measures, during a third uplink null period, background interference, and in step **624** the base station determines a change in the measured background interference from the measurements corresponding to the second uplink null period and the third uplink null period. Operation proceeds from step **624** to step **626**, in which the base station determines a difference between the first uplink transmission power control value and the second uplink transmission power control value. Operation proceeds from step **626** to step **628**.

In step **628**, the base station determines a third uplink transmission power control value as a function of the measured background interference corresponding to the third uplink null period, the determined change in measured background interference between the second and third uplink null periods, and the determined difference between the two previously transmitted power control values. Operation proceeds from step **628** to step **630**, in which the base station transmits the determined third uplink transmission power control value.

FIG. **13** is a drawing of an exemplary base station **2800** in accordance with various embodiments. Exemplary base station **2800** manages reception interference from peer to peer wireless terminals transmitting into the same air link resources used for its wide area network uplink communications. Exemplary base station **2800** determines and transmits an uplink power control signal utilized by peer to peer wireless terminals in determining their transmission power level. In some embodiments, the uplink power control signal transmitted by the base station **2800** is also utilized by wireless terminals, using the base station as a point of network attachment and transmitting uplink signals to the base station, to control transmission power levels.

Exemplary base station **2800** includes a receiver module **2802**, a transmitter module **2804**, a processor **2806**, an I/O interface **2808**, and a memory **2810** coupled together via a bus **2812** over which the various elements may interchange data and information.

Receiver module **2802**, e.g., an OFDM receiver, is coupled to receive antenna **2814** via which the base station **2800** receives uplink signals from wireless terminals, e.g., wireless terminals functioning in a cellular mode and using the base station **2800** as a point of network attachment. Receiver module **2802** also receives interference from peer to peer communications devices operating in the local vicinity. In some embodiments, receiver module **2802** also receives interference from uplink signaling from cellular devices in adjacent cells.

Transmitter module **2804**, e.g., an OFDM transmitter, is coupled to transmit antenna **2816**, via which the base station **2800** transmits downlink signals to wireless terminals using base station **2800** as a point of network attachment. Transmitter module **2804** also transmits uplink transmission power control value signals to be used by peer to peer wireless terminals to control their transmission power level, the peer to peer wireless terminals using the base station's uplink band

for peer to peer signaling and thus producing interference from the perspective of the base station receiver module **2802**.

Memory **2810** includes routines **2818** and data/information **2820**. The processor **2806**, e.g., a CPU, executes the routines **2818** and uses the data/information **2820** in memory **2810** to control the operation of the base station **2800** and implement methods. Routines **2818** include a communications routine **2822**, an interference measurement module **2824**, a wireless terminal power control module **2826**, and a wireless terminal power control signal transmission module **2830**. In some embodiments, routines **2818** include one or more of wide area network synchronization module **2828** and interference type separation module **2832**.

Communications routine **2822** implements various communications protocols used by the base station **2800**. Interference measurement module **2824** measures during uplink null time periods background interference. Wireless terminal power control module **2826** determines uplink transmission power control values as a function of measured background interference. In various embodiments, the wireless terminal power control module **2826** determines an uplink power control value using stored interference budget information in combination with the measured background interference to generate the uplink transmission power control value. Wireless terminal power control signal transmission control module **2830** controls the transmitter module **2804** to transmit a generated uplink transmission power control signal, e.g., first uplink transmission power control value **2850**. In some embodiments, the control module **2830** controls the transmitter module **2804** to transmit a generated uplink transmission power control value in accordance with a recurring schedule. In some embodiments, the control module **2830** controls transmission as a function of interference level information. In some embodiments, wireless terminal power control module **2826** determines an uplink transmission power control value as a function of the measured background interference and a change in the measured background interference from a previous measurement. In some embodiments, the wireless terminal power control module **2826** determines an uplink transmission power control value as a function of the difference between two previously transmitted power control values.

In some embodiments, the wireless terminal power control module **2826** determines an uplink transmission power control value by operations including modifying a previous uplink transmission power control value when the measured background interference exceeds an interference budget limit indicated by the stored interference budget information, the modified transmission power control value limiting peer to peer transmission power levels more than the previous uplink transmission power control value. In some embodiments, the wireless terminal power control module **2826** determines an uplink transmission power control value by operations including modifying a previous uplink transmission power control value when the measured background interference is below an interference budget limit indicated by the stored interference budget information, the modified transmission power control value increasing peer to peer transmission power levels more than the previous uplink transmission power control value. In various embodiments, the changing to a higher level is performed when said measured interference is below said interference budget limit by at least a predetermined threshold.

Thus the value of the uplink transmission power control value is used by base station **2800** to regulate the transmission power level of peer to peer communications, thereby impacting interference to uplink signals being directed to base station **2800**.

Wide area network synchronization module **2828** is used for maintaining synchronization with at least one adjacent base station to maintain synchronization of uplink null time periods between adjacent base stations.

Interference type separation module **2832** is used to obtain an estimate of the amount of uplink interference contribution sourced from peer to peer communications. In some embodiments, the interference type separation module **2832** intentionally inputs a controlled change level in the uplink transmission power control value and calculates an observed effect in the interference measurement during a subsequent uplink null period as part of separating the peer to peer interference from other interference sources, e.g., cellular communications devices transmitting uplink signals in an adjacent cell which is not synchronized with respect to base station **2800**.

Data/information **2820** includes time/frequency structure information **2834**, stored interference budget information **2840**, a plurality of sets of interference measurement information (uplink interference measurement information **1** **2846**, . . . , uplink interference measurement information N **2848**), and a plurality of generated uplink transmission power control values (first uplink transmission power control value **2850**, . . . , Mth uplink transmission power control value **2852**).

Timing/frequency structure information **2834** includes recurring time structure information **2836**. The recurring time structure information **2836** includes information identifying uplink null time periods **2838**. In some embodiments, an uplink null time period corresponds to a period of time in which at least a fraction of uplink bandwidth used by said base station is intentionally not used for transmitting uplink signals to the base station. In some embodiments, an uplink null time period is a time period during which wireless terminals, e.g., cellular communications devices, using the base station **2800** attachment point intentionally refrain from sending uplink signals to the base station **2800**. During this time period peer to peer wireless terminal signaling continues using the uplink frequency band. Thus, the base station **2800** can measure background interference during this period. If adjacent base stations are synchronized such that uplink null periods are concurrent, then the measured noise during these periods can be associated with peer to peer signaling. However, if adjacent base stations are not synchronized, and the same uplink band is used, then the measured interference during such an uplink null period includes interference from both peer to peer wireless terminals and cellular communications devices corresponding to adjacent base stations.

Stored interference budget information **2840** includes background interference limit information **2842** and threshold information **2844**.

FIG. **14** is a drawing **900** including an exemplary communications system **902** and a frequency band usage table **904** in accordance with various embodiments. In the exemplary communications system **900** a wide area network shares bandwidth with peer to peer communications. In various embodiments, the wide area network corresponds to a deployed system and the peer to peer capabilities involve add on and/or upgrade features. In some embodiments, the exemplary communications system **902** is initially deployed including both WAN and peer to peer capabilities. Frequency band usage table **904** indicates two types of embodiments which can correspond to exemplary system **902**. In the first type of embodiment, type A embodiments, the wide area network uses frequency division duplex (FDD) and the wide

area frequency division duplex uplink band shares bandwidth with peer to peer communications activities. In the second type of embodiment, type B embodiments, the wide area network uses time division duplex (TDD) of the same band for uplink and downlink, and the wide area band shares an uplink time slot with peer to peer communications activities. Thus, in both types of embodiments, uplink signaling from the wide area network communications devices can interfere with reception of peer to peer communications signals by a peer to peer communications device, and the peer to peer communications signals directed between peer to peer communications devices can interfere with the reception of wide area network uplink signals at the base station.

Exemplary communications system **902** includes a base station **906**, a wide area network wireless terminal **908**, e.g., a cellular mobile node, a first peer to peer wireless terminal **910**, and a second peer to peer wireless terminal **912**. For the purposes of illustration consider that wide area network wireless terminal **908** transmits uplink signal **914** to base station **906**. Base station **906** receives this signal and measures the received signal as P_{C1}. The signal **914** from the perspective of peer to peer wireless terminal **2 912** is viewed as interference **916** from the wide area network wireless terminal **908**. Now consider that the first peer to peer wireless terminal **910** transmits peer to peer signal **918** to peer to peer wireless terminal **2 912**. The signal **918** from the perspective of base station **906** is viewed as interference **920** from first peer to peer wireless terminal **910**. Base station **906** receives this interference and measures the received signal as P_{P1}.

In accordance with various embodiments, priority is given to the wide area system, and interference is managed at the base station. For example, a power control value α is chosen to achieve a goal such as $(P_{P1}/P_{C1}) \leq \alpha$. In some such embodiments α is a value such as −10 dB, −20 dB, or −30 dBs. Although described in the example, with respect to one peer to peer wireless terminal causing interference with respect to base station reception corresponding to one wide area network's wireless terminal uplink signaling, it is to be understood that there may be, and sometimes are, a plurality of peer to peer wireless terminals transmitting and contributing to the interference, and there may be, and sometimes are, a plurality of wide area network wireless terminals transmitting uplink signals to the base station, which the base station is attempting to recover. Thus, the control factor α, determined by the base station to manage interference can be, and sometimes is, dependent upon multiple users. In some embodiments, the control factor α depends on the number of users, e.g., the number of active wide area network users and/or the number of active peer to peer users.

FIG. **15** is a drawing **1002** illustrating a feature of various embodiments, in which a wide area network has a silent period in which the base station monitors for and measures peer to peer noise. Exemplary drawing **1002** includes a base station **1004** having a corresponding cellular coverage area **1006**. In some embodiments the cellular coverage area has a radius of at least 1 kilometer. Within the cell, there is a plurality of wireless terminals functioning in a cellular mode of operation (WT A **1008**, WT B **1010**, WT C **1012**, WT D **1014**). These wireless terminals (**1008**, **1010**, **1012**, **1014**) receive downlink signals from base station **1004** and transmit uplink signals to base station **1004**. However, this point in time corresponds to an intentional wide area network uplink silent period where the wide area network wireless terminals (**1008**, **1010**, **1012**, **1014**) do not transmit any uplink signals.

The cell **1006** also includes a plurality of wireless terminals functioning in the peer to peer mode of operation (WT **1 1016**, WT **2 1018**, WT **3 1020**, WT **4 1022**). Peer to peer communications are not restricted during this time period. Peer to peer WT **1 1016** happens to be transmitting a peer to peer signal **1024** to peer to peer wireless terminal **2 1018**. This transmitted peer to peer signal **1024** is viewed as peer to peer noise interference signal **1026** from the perspective of the receiver in base station **1004**. Peer to peer WT **3 1020** happens to be transmitting a peer to peer signal **1028** to peer to peer wireless terminal **4 1022**. This transmitted peer to peer signal **1028** is viewed as peer to peer noise interference signal **1030** from the perspective of the receiver in base station **1004**.

FIG. **16** is a drawing **1102** illustrating several features of various embodiments, and is a continuation of the example of FIG. **15**. The base station **1004** determines a power control value α as a function of the measured peer to peer interference. The base station then broadcasts this control value α via signal **1104** to be used by the wireless terminals. In this exemplary embodiment, the base station broadcasts a single value for control value α; however, the value can be, and sometimes is, used differently by the different wireless communications devices receiving the broadcast signal **1104**. In this example, the set of wireless terminals operating in the cellular mode (WT A **1008**, WT B **1010**, WT C **1012**, WT D **1014**) uses a first power control function, $f_1(\alpha)$ **1106**, to determine a transmission power level control parameter; while the set of wireless terminals operating in the peer to peer mode (WT **1 1016**, WT **2 1018**, WT **3 1020**, WT **4 1022**) use a second power control function, $f_2(\alpha)$ **1108**, to determine a transmission power control parameter.

FIG. **17** is a drawing of an exemplary look-up table for control values **1200** illustrating a feature of various embodiments. In some embodiments, a wireless terminal receives a broadcast power control value from a base station and determines its own power control value to use as a function of the received value and a corresponding service level. Different service levels may, and sometimes do, correspond to different traffic types, different types of services, and/or to different users of the service, and map to different service levels. For example, exemplary different priorities, in some embodiments, are associated with different traffic types, e.g., voice, latency critical data, and best effort type data. Exemplary different types of service include, e.g., emergency communications services and ordinary communications. Different types of users include, e.g., high priority users such as police, fire, emergence services, medium priority users having subscribed to a high service level plan, and low priority users having subscribed to a low service level plan. Thus in some embodiments, a recovered power control value is modified as a function of priority level.

In exemplary table **1200**, first column **1202** indicates exemplary received control values α, second column **1204** indicates exemplary corresponding service level **1** control values α_1, third column **1206** indicates exemplary corresponding service level **2** control values α_2, and fourth column **1208** indicates exemplary corresponding service level **3** control values α_3. First row **1210** indicates that if a wireless terminal using look-up table **1200** receives a broadcast power control value from a base station which indicates −10 dB and its corresponding service level is (service level **1**, service level **2**, service level **3**), then it uses (−10 dB, −15 dB, −20 dB), respectively, for its power control value. Second row **1212** indicates that if a wireless terminal using look-up table **1200** receives a broadcast power control value from a base station which indicates −20 dB and its corresponding service level is (service level **1**, service level **2**, service level **3**), then it uses (−20 dB, −25 dB, −30 dB), respectively, for its power control value. Third row **1214** indicates that if a wireless terminal using look-up table **1200** receives a broadcast power control

value from a base station which indicates −30 dB and its corresponding service level is (service level **1**, service level **2**, service level **3**), then it uses (−30 dB, −35 dB, −40 dB), respectively, for its power control value.

FIG. **18** is a flowchart **1300** of an exemplary method of operating a base station in accordance with various embodiments, e.g., a base station in which its uplink bandwidth is also utilized for peer to peer signaling. The base station is, e.g., a base station, operating as part of a cellular communications system in which operations are synchronized between adjacent base stations. Synchronization between adjacent base stations facilitates the implementation of universal uplink null periods, in which wide area network wireless terminal cell uplink signaling can be controlled to universally stop. These null periods are utilized for the measurement of background interference. In such an embodiment, the background interference W can be approximated by W=thermal noise+peer to peer noise. The base station desires to control interference, and determines and broadcasts a power control factor α, to be received by the wireless terminals in its vicinity.

Operation starts in step **1302**, where the base station is powered on and initialized. In some embodiments, the initialization includes the use of a default value for power control factor α, which is broadcast to the wireless terminals. Operation proceeds from start step **1302** to step **1304**. In step **1304**, the base station measures background interference, W, during a null interval, e.g., an uplink null interval in which WAN wireless terminals are controlled to refrain from signaling.

Operation proceeds from step **1304** to step **1306**. In step **1306**, the base station determines a power control factor α as a function of the measured background interference. In various embodiments, the function used is such that as W increases, a increases for at least some non-null range of W. In some embodiments, the determination of step **1306** includes a comparison with stored interference budget information. Operation proceeds from step **1306** to step **1308**.

In step **1308**, the base station broadcasts the determined power control factor α. Operation proceeds from step **1308** to step **1304**, where another measurement of background interference is performed.

In some embodiments, multiple measurements of background interference are performed and used corresponding to multiple null intervals in generating a determined power control factor which is broadcast. Thus in some embodiments, the base station performs a set of background measurements, e.g., multiple iterations of step **1304**, corresponding to a set of null intervals before broadcasting a determined power control factor in step **1308**.

FIG. **19** is a flowchart **1400** of an exemplary method of operating a base station in accordance with various embodiments, e.g., a base station in which its uplink bandwidth is also utilized for peer to peer signaling. The base station is, e.g., a base station, operating as part of a cellular communications system in which operations are not synchronized between adjacent base stations. In the uplink timing structure used by the base station uplink null periods are utilized by the base station to measure background interference. However, since operations in neighboring cells are not synchronized, the interference levels from the neighboring cells may vary over time making it more difficult to extract the peer to peer component of background interference, than would be case if the adjacent base stations were synchronized and were also controlled to have intentional uplink nulls occurring concurrently. The base station desires to control interference, and determines and broadcasts a power control factor α, to be received by the wireless terminals in its vicinity. In accordance with a feature of this embodiment, the base station intentionally varies the broadcast power control factor which it broadcasts, as a controlled input, in order to measure response.

Operation starts in step **1402**, where the base station is powered on and initialized, and proceeds to step **1404**. In step **1404**, the base station broadcasts a power control factor α_1. At this point α_1 is a default value obtained from initialization. Then, in step **1406**, the base station measures background interference W_1 during a null interval, e.g., an uplink WAN null interval in which wireless communications devices using the base station are intentionally restricted from transmitting uplink signals. Operation proceeds from step **1406** to step **1408**.

In step **1408**, the base station adjusts the power control factor to determine a second power control factor α_2. For example, $\alpha_2=\alpha_1+\Delta\alpha$, where $\Delta\alpha$ is a non-zero value and can be positive or negative. Typically $\Delta\alpha$ has a magnitude which is a small fraction of the magnitude α_1, e.g., less than or equal to 25% of α_1. Operation proceeds from step **1408** to step **1410**, in which the base station transmits the new power control factor α_2. Operation proceeds from step **1410** to step **1412**.

In step **1412**, the base station measures background interference W_2 during a null interval. Operation proceeds from step **1412** to step **1414**. In step **1414**, the base station determines power control factor α_3 as a function of the change in the measured background interference and the change in the power control factors which were transmitted. For example α_3 is determined as a function of ΔW and $\Delta\alpha$, where $\Delta W=W_2-W_1$. In one exemplary embodiment, α_3 is one of: $\alpha_3=\alpha_2+\Delta\alpha$ and $\alpha_3=\alpha_1-\Delta\alpha$. Operation proceeds from step **1414** to step **1416**, where the base station sets $\alpha_1=\alpha_3$. Then operation proceeds to step **1404**, where the base station broadcasts the power control factor α_1.

FIG. **20** is a drawing of a plot **1500** of noise W on vertical axis **1502** vs α on horizontal axis **1504**. Noise W, which represents receive noise at a base station attempting to recover uplink signals, includes peer to peer noise and other cell interference. The variable α is a power control factor. Curve **1506** is a characteristic curve of W vs α corresponding to other cell interference level **1508**. During an intentional uplink null time interval corresponding to a first base station, the first base station intentionally controls wireless terminals using it as a point of network attachment to refrain from uplink signaling. During this intentional uplink null time interval, peer to peer activity within the cell is allowed to continue. Thus the peer to peer activity is treated by the first base station receiver as noise and contributes to the measured noise W.

Now consider that an adjacent base station is operating asynchronously with respect to the first base station. Since the adjacent base station is asynchronous with respect to the first base station, intentional uplink null time intervals of the adjacent base station do not necessary overlap intentional null time intervals of the first base station. Thus uplink signaling of the adjacent base station also contributes to the measured noise W measured by the first base station during intentional uplink null periods of the first base station.

Characteristic W vs α curve **1506** corresponds to a given level of other cell interference **1508**, which represents a minimum level of interference. If operating on a point of the curve **1506** near saturation, then increases in a do not give significant improvement in reduction in noise W. An increase in a corresponds to a limiting of transmission power for peer to peer signaling. Thus, under such conditions, additionally restricting peer to peer transmission power levels does not significantly improve reception of the uplink signals from

cellular wireless terminals. However; if operating on a point of curve **1506** having a high value for slope, a small increase in α can give a significant change decrease in the level of noise W. Under such conditions, at times, it may be beneficial to decrease α such as to improve recovery of the uplink signals from cell based wireless terminals. For example, a small throttling back of peer to peer transmission power levels, can, under such conditions, result in a significant improvement in uplink signaling recovery and/or throughput.

In general, in various embodiments, good wide area, e.g., cellular, based communications reception is given priority to the peer to peer signaling. However, it is desirable, that the peer to peer communications throughput be maximized given a particular level of desired cell based uplink reception quality. It may be observed that W vs α characteristic curve will change as a function of the other cell interference. The other cell interference may, and sometimes does, change independently of the first cell operation. For example, due to: conditions, the number of cellular based wireless terminal users in the adjacent cell, adjacent cell uplink traffic load, etc., the other cell interference experienced by the first base station may change to a different level. Plot **1600** of FIG. **21** illustrates a different level of other cell interference **1608** as compared to other cell interference level **1508** of FIG. **20**. In addition FIG. **21** illustrates a different characteristic curve **1606** as compared to characteristic curve **1506**.

FIG. **22** illustrates an exemplary method of adjusting the selection of power control factor α used in various embodiments in response to noise measurements. FIG. **22** is a plot **1700** of noise W on vertical axis **1502** vs α on horizontal axis **1504** corresponding to characteristic curve **1506**. At the time of operation, the first base station may be unaware that the first base station is operating on characteristic curve **1506** corresponding to other cell interference level **1508** of FIG. **20**, with curve **1506** being one of a family of curves including curve **1506** and curve **1606** of FIG. **21**.

The first base station sets α to an initial value α_1 **1702**, which is broadcast. The value α_1 **1702** is used by the peer to peer wireless terminals in the first base station's cell to control their peer to peer transmission power. During an intentional uplink null period of the first base station, the first base station measures the receive noise level W as W_1 **1706**. Then, the first base station intentionally changes the value of α_1 by an amount $\Delta\alpha$ **1708**, to obtain α_2 **1710**. This represents a controlled input used to intentionally drive the receive noise level to a different point (from **1704** to **1712**) on the characteristic curve **1506**. The first base station broadcasts the parameter α_2 **1710**. The value α_2 **1720** is used by the peer to peer wireless terminals in the first base station's cell to control their peer to peer transmission power. During an intentional uplink null period of the first base station, the first base station measures the receive noise level W as W_2 **1714**. The first base station measures the change in W, ΔW **1716**. The first base station then decides upon a new value for α as a function of the input driving value $\Delta\alpha$, the measured response ΔW, and some stored interference budget information. In some embodiments, the first base station decides upon the new value for α as a function of at least one noise measurement point, e.g., W_1 or W_2. In this example, the first base station sets the new value for α, α_3 to $\alpha_3=\alpha_1-\Delta\alpha$ if ΔW is small as indicated by point **1718**; while, the first base station sets the new value for α, α_3 to $\alpha_3=\alpha_2+\Delta\alpha$ if ΔW is large as indicated by point **1720**, e.g., with the small and large determination being with respect to predetermined stored interference budget information. The power control factor α_3 is then broadcast by the first base station to be used by the peer to peer wireless terminals in the cell to control their transmission power levels.

FIG. **23** is a drawing **1800** illustrating exemplary bandwidth usage in some embodiments utilizing a time division duplex (TDD) for the wide area network, e.g., for the cellular communications. With respect to the wide area network, e.g., corresponding to a base station, the same frequency band is shared, e.g., in an alternating pattern between uplink and downlink. For example, the TDD band used for the wide area, e.g., cellular communications, is used for (uplink, downlink, uplink, downlink) as indicated by blocks (**1804**, **1806**, **1808**, **1810**), respectively, along time line **1802**. In addition to typical cellular based activities, the base station transmits a peer to peer broadcast signal(s), e.g., a beacon signal and/or other broadcast signals, during an interval typically reserved for wide area uplink signaling. This is represented by signals (**1812**, **1814**) corresponding to time intervals for blocks (**1804**, **1808**), respectively. In addition, time intervals designated to be used for wide area network, e.g., cellular uplink, are also used for peer to peer signaling, with the same TDD band being used, as indicated by cellular uplink blocks (**1804**, **1808**) being concurrent with peer to peer blocks (**1816**, **1818**), respectively.

FIG. **24** is a drawing **1900** illustrating exemplary bandwidth usage in some embodiments utilizing a frequency division duplex (FDD) for the wide area network, e.g., for the cellular communications. With respect to the wide area network, e.g., corresponding to a base station, different frequency bands are used by the uplink and downlink. In this exemplary embodiment, the FDD wide area uplink band is represented by block **1904** and the FDD wide area downlink band is represented by block **1906** along frequency axis **1902**. In some embodiments, the uplink and downlink bands are adjacent. In some embodiments, the uplink and/or downlink bands include non-contiguous portions. In some embodiments, at least a portion of one of the uplink and downlink bands is included between two different portions of the other one of the uplink and downlink bands.

In addition to the typical cellular based uplink signaling in the FDD wide area uplink band, the band is used for other activities related to peer to peer signaling. In FIG. **24**, the FDD wide area uplink band **1904** is also used by the base station to transmit peer-peer broadcast signal(s) **1908**, e.g., a beacon signal and/or other broadcast signals are transmitted by the base station to be used by peer to peer wireless terminals. Peer to peer wireless terminals also use the same band for peer to peer signaling as indicated by block **1910** located on frequency axis **1902** corresponding to FDD wide area uplink band **1904**.

FIG. **25** is a drawing of an exemplary multi-mode wireless communications device **2000** implemented in accordance with various embodiments. Multi-mode wireless communications device **2000** supports both wide area network communications and peer to peer communications. In some embodiments, the communications device **2000** uses frequency division duplex for the wide area network communications and time division duplex for the peer to peer communications. In some such embodiments, the frequency band used for the peer to peer communications is the same frequency band as used for the uplink WAN communications. Wireless communications device **2000** includes a wireless transceiver module **2002**, user I/O devices **2004**, a processor **2006**, and memory **2008** coupled together via a bus **2010** over which the various elements may exchange data and information.

User I/O devices **2004** include, e.g., microphone, keyboard, keypad, camera, switches, mouse, speaker, display. User I/O devices **2004** allow a user of wireless communications device **2000** to input data/information, access output

data/information, and control at least some functions of the communications device **2000**, e.g., set the communications device in a WAN mode of operation, set the communications device in a peer to peer mode of operation, set the communications device in a mode of operation allowing both WAN communications and peer to peer communications, etc. In some embodiments, in which the user chooses peer to peer communications, the communications device automatically switches on a recurring basis into a WAN mode of operation to be able to monitor for WAN paging signals being communicated. In some embodiments in which the uses sets the communications device in a mode of operation supporting both WAN signaling and peer to peer signaling, the communications device automatically switches between modes as a function of at least one of reception priority considerations and handoff considerations.

Memory **2008** includes routines **2050** and data/information **2052**. The processor **2006**, e.g., a CPU, executes the routines **2050** and uses the data/information **2052** in memory **2008** to control the operation of the wireless communications device **2000** and implement methods.

Wireless transceiver module **2002** includes a duplexer module **2024**, a transmitter chain **2001**, a 1st receiver chain **2003**, a 2nd receiver chain **2005**, a switch **2032**, an analog to digital converter (ADC) **2034** and a digital signal processor (DSP) **2016**. DSP **2016** includes a digital transmit signal module **2042**, a mode control module **2044**, and a digital receive signal module **2046**. Transmitter chain **2001** is used for generating transmission signals having a first RF frequency, e.g., the frequency represented by f_{UL}. First receiver chain **2003** is for processing received signals having a second RF frequency, e.g., the frequency represented by f_{DL}. Second receiver chain **2005** is for processing received signals having the first RF frequency, e.g., the frequency represent by f_{UL} **2026**.

Transmitter chain **2001** includes a digital to analog converter (DAC) **2018**, a mixer **2020**, and a power amplifier (PA) **2022**. The digital transmit signal module **2042** outputs a digital signal to DAC **2018** which converts the digital signal to an analog signal. The analog signal is input to mixer **2020** which also has input **2026** which is the uplink frequency (f_{UL}), e.g., the wide area network uplink communications band carrier frequency. The output of the mixer **2020** is input to power amplifier **2022**, which amplifies the received signal and outputs the amplified signal to duplexer module **2024**. The duplexer module **2024** couples the received amplified signal to be transmitted to antenna **2012**, via which the communications device **2000** transmits signals. Transmitted signals include uplink signals when the wireless communications device **2000** is operating in a WAN mode of operation and include peer to peer signals when the communications device is operating in a peer to peer mode of operation.

The first receiver chain **2003** includes a first bandpass filter (BPF_1 **2028**) and a mixer **2030**; the second receiver chain **2005** includes a second bandpass filter (BPF_2 **2038**) and a mixer **2040**. When the wireless communications device **2000** is to be operated to receive WAN signals, mode control module **2044** controls switch **2032** to couple the output of the 1st receiver chain **2030** to the ADC **2034**. Alternatively, when the wireless communications device is to be operated to receive peer to peer signals, mode control module **2044** controls switch **2032** to couple the output of the 2nd receiver chain **2005** to the ADC **2034**.

Assume that the switch **2032** has been controlled by mode control module **2044** to couple the 1st receiver chain **2003** to ADC **2034**. Downlink signals from a base station are received via antenna **2012** and coupled, via duplexer module **2024**, to BPF_1 **2028**. The output of the band pass filter **1 2028** is input to mixer **2030**. Another input to mixer **2030** is downlink frequency (f_{DL}) **2036**, e.g., the wide area network downlink communications band carrier frequency. The mixer module **2030** removes the carrier frequency, e.g., obtaining an analog baseband signal. The output signal, e.g., the analog baseband signal is fed to the ADC converter **2034** via switch **2032**. The ADC converter **2034** processes the input signal obtaining a digital signal representation, which is fed to the digital receive signal module **2046**.

Now assume that the switch **2032** has been controlled by mode control module **2044** to couple the 2nd receiver chain **2003** to ADC **2034**. Peer to peer signals from a wireless communications device operating in a peer to peer mode are received via antenna **2014** and coupled to BPF_2 **2038**. The output of the band pass filter **2 2038** is input to mixer **2040**. Another input to mixer **2040** is uplink frequency (f_{UL}) **2026**, e.g., the wide area network uplink communications band carrier frequency which is also being utilized for peer to peer signaling. The mixer module **2040** removes the carrier frequency, e.g., obtaining an analog baseband signal. The output signal, e.g., the analog baseband signal is fed to the ADC converter **2034** via switch **2032**. The ADC converter **2034** processes the input signal obtaining a digital signal representation, which is fed to the digital receive signal module **2046**.

Mode control module **2044** switches between use of first and second receiver chains (**2003**, **2005**) as a function of which one of a first and second mode of operation the mode control module **2044** selects to be used at a given time. In various embodiments, the first mode of operation is a frequency division duplex mode of operation, e.g., a wide area network FDD mode of operation, and the second mode of operation is a peer to peer communications mode of operation, e.g., a time division duplex (TDD) peer to peer mode of operation.

In some embodiments, the mode control module **2044** automatically controls switching as a function of a wide area network reception schedule implemented by the communications device **2000**. In some such embodiments, the scheduling information indicates when wide area network paging messages may be received by the multi-mode communications device **2000**, said mode control module **2044** controlling said device **2000** to operate in the first mode of operation, e.g., the WAN mode of operation, during time periods in which the wide area network paging messages may be received by the multi-mode communications device **2000**. In some embodiments, the mode control module **2044** causes the device **2000** to switch modes in response to a received user input selection. In some embodiments, mode control module **2044** causes the device **2000** to switch modes in response to reception priority information. In various embodiments, the mode control module **2044** causes the device **2000** to switch modes in response to a handoff indicator signal. In some embodiments, the mode control module **2044** causes the device **2000** to switch modes in response to schedule information, e.g., peer to peer communications are restricted during certain times of anticipated high WAN signaling to reduce interference. In some embodiments, the mode control module **2044** causes the device **2000** to switch modes in response to location information, e.g., some locations may be located outside a cellular coverage area or other locations may be too close to a base station to permit peer to peer signaling in the uplink frequency band due to interference considerations at the base station receiver or a service provider does not have authorization to use one of WAN signaling or peer to peer signaling in a particular region. In some embodiments, the mode control module **2044** causes

the device **2000** to switch modes in response to detected channel quality changes on a link being maintained.

Routines **2050** include a communications routine **2054** and wireless terminal control routines **2056**. The communications routine **2054** implements various communications protocols used by the wireless communications device **2000**. Wireless terminal control routines **2056** include an I/O module **2058**, a frequency band module **2060**, a paging module **2062**, a wide area network control module **2064**, a peer to peer control module **2066**, a reception priority module **2068**, and a handoff module **2070**. Data/information **2052** includes schedule information **2072**, user mode choice information **2074**, wide area network signals **2076**, peer to peer signals **2078**, handoff indicator signals **2080**, and information identifying the current mode **2082**.

I/O module **2058** controls operation of user I/O devices **2004** and receives user mode choice information **2074**, e.g., a user choice to use WAN signaling, a user choice to enable peer to peer signaling, a user choice to place the device in a mode which automatically switches between WAN and peer to peer operations as a function of reception priority information and/or handoff information.

Frequency band module **2060** selects and sets the frequency input signals f_{UL} **2026** used by transmitter chain **2001** and 2nd receiver chain **2005** and sets f_{DL} **2036** used by 1st receiver chain **2003**.

Paging module **2062** controls operations related to paging. In some embodiments, when peer to peer operations are enabled and the wireless communications device **2000** is operating primarily using peer to peer signaling, the communications device **2000** is switched to receive WAN paging signals during WAN paging intervals in a recurring schedule.

WAN control module **2064** controls operations when in the WAN mode, e.g., controlling digital transmit signal module **2042** to generate uplink signals to be communicated to a base station serving as a point of network attachment and controlling digital receive signal module **2046** to process received downlink signals from a base station.

Peer to peer control module **2066** controls operations when in the peer to peer mode, e.g., controlling the digital transmit signal module to generate peer to peer signals to be transmitted to other wireless terminals operating in a peer to peer mode and controlling the digital receive signal module **2046** to process received peer to peer signals from other wireless terminals operating in a peer to peer mode of operation.

Reception priority module **2068** determines whether WAN network communications are to have priority or whether peer to peer signaling is to have priority at a given time. Determinations by module **2068** are used by mode control module **2044**, which controls switching between alternate receiver chains (**2003**, **2005**) to implement WAN communications or peer to peer communications, respectively. Thus mode control module **2044**, switches between a WAN mode and a peer to peer mode as a function of reception priority information. For example, in some embodiments, priority is usually given to WAN signaling over peer to peer signaling; however, for at least some types of users and/or some types of signaling priority is given to peer to peer signaling over wide area network signaling, e.g., users and/or signals corresponding to emergency services. As another example, priority is given based on evaluating competing latency considerations and/or service levels.

Handoff module **2070** determines whether peer to peer signaling or WAN signaling is to be used for a portion of a handoff. Handoff module **2070** generates handoff indicator signals **2080**, which mode control module **2044** is responsive to, causing mode switches. Some handoff control signals **2080** indicate a handoff from a peer to peer communications link to a wide area network communications link to cause a switch from a peer to peer mode of operation to a wide area network mode of operation. Other handoff control signals **2080** indicate a handoff from a wide area network communications link to a peer to peer communications link to cause a switch from a wide area network mode of operation to a peer to peer mode of operation.

Schedule information **2072** includes WAN schedule information **2084** and peer to peer schedule information **2086**. WAN schedule information **2084** includes information defining an uplink timing/frequency structure and information defining a downlink timing/frequency structure. The WAN scheduling information **2084** includes information identifying WAN paging intervals. In some embodiments, peer to peer operations are suspended during at least some WAN paging intervals to support WAN paging access of wireless communications devices. Peer to peer schedule information **2086** includes information identifying different peer to peer intervals in a recurring peer to peer timing structure, e.g., peer discovery intervals, peer to peer paging intervals, and traffic intervals.

User mode choice information **2074** includes information from I/O module **2058** identifying a user commanded or requested mode preference, e.g., a wide area network mode, a peer to peer mode, or a mode which allows the communications device **2000** to automatically alternate between WAN mode and peer to peer mode, e.g., as a function of signal quality, priority, loading and/or handoff information.

WAN signals include received downlink signals and uplink signals to be transmitted. Received downlink signals from a base station include, e.g., beacon signals, pilot channel signals, synchronization signals, power control signals, timing control signals, paging signals, assignment signals, and traffic channel signals. Uplink signals include, e.g., access signals, timing control signals, dedicated control channel signals including air link resource request signals and channel condition reports, page request signals and uplink traffic channel signals.

Peer to peer signals include peer to peer transmit signals and peer to peer receive signals. Exemplary peer to peer transmit signals include, e.g., a user beacon signal identifying communications device **2000**, a peer to peer paging signal, a peer to peer traffic request signal, and a peer to peer traffic signal. Exemplary peer to peer receive signals include, e.g., user beacons from other wireless communications devices in the local vicinity, peer to peer paging signals, peer to peer traffic request signals, and peer to peer traffic signals.

Handoff indicator signals **2080** are output from handoff module **2070** and used by mode control module **2044**. Current mode information **2082** indicates the current mode set by mode control module **2044** corresponding to mode control signal **2048**.

In some embodiments, the same antenna is used irrespective of whether first receiver chain **2003** or second receiver chain **2005** is being used. In some embodiments, an additional switch is used to couple one of first receiver chain **2003** and second receiver chain **2005** to duplexer module **2024**, the operation of the additional switch being coordinated with the operation of switch **2032**.

In various embodiments, duplexer module **2024** is not used and a separate antenna is used for the transmitter and the receiver. In some embodiments, an additional switch is used to couple one of first receiver chain **2003** and second receiver chain **2005** to the receive antenna, the operation of the additional switch being coordinated with the operation of switch **2032**.

In some embodiments, the first and second band pass filters are different hardware devices. In some embodiments, the first and second band pass filters are programmable and are programmed to implement different filters.

In another embodiment, a single mixer is used in place of mixers (**2030**, **2040**) with the frequency input being controllably switched between f_{DL} and f_{UL} as a function of the mode control signal and the band pass filter being switched as a function of the mode control signal.

In some embodiments, various elements included in DSP **2016**, e.g., mode control module **2044**, are included in routines **2050**. In some embodiments, various elements included in memory **2008**, are included in wireless transceiver module **2002**. In some embodiments, an individual wireless transmitter module and an individual wireless receiver module are implemented in place of wireless transceiver module **2002**.

FIG. **26** is a drawing **2100** illustrating exemplary frequency bands and shared frequency band usage between wide area network communications usage and peer to peer communications usage in accordance with various embodiments. A band used as a wide area network communications band is also allocated for usage as a peer to peer TDD receiver band and as a peer to peer TDD transmitter band. As an example, the bands presented in FIG. **26** may be utilized by the multi-mode wireless communications device **2000** of FIG. **25**, e.g., with a different pair of WAN uplink and downlink communications bands being available and/or used at different locations and/or at different times.

Horizontal axis **2101** represents frequency. Corresponding to frequency f_{UL1} **2103** there is a wide area network uplink frequency division duplex band **2102**, a peer to peer time division duplex transmit band **2106** and a peer to peer time division duplex receive band **2108**. Wide area network uplink frequency division duplex band **2102** is paired with wide area network downlink frequency division duplex band **2104**. Corresponding to frequency f_{DL1} **2105** there is wide area network downlink frequency division duplex band **2104**.

Similarly, corresponding to frequency f_{UL2} **2113** there is a wide area network uplink frequency division duplex band **2112**, a peer to peer time division duplex transmit band **2116** and a peer to peer time division duplex receive band **2118**. Wide area network uplink frequency division duplex band **2112** is paired with wide area network downlink frequency division duplex band **2114**. Corresponding to frequency f_{DL2} **2115** there is wide area network downlink frequency division duplex band **2114**.

Similarly, corresponding to frequency f_{UL3} **2123** there is a wide area network uplink frequency division duplex band **2122**, a peer to peer time division duplex transmit band **2126** and a peer to peer time division duplex receive band **2128**. Wide area network uplink frequency division duplex band **2122** is paired with wide area network downlink frequency division duplex band **2124**. Corresponding to frequency f_{DL3} **2125** there is wide area network downlink frequency division duplex band **2124**.

Consider exemplary device **2000** of FIG. **25**. The communications device decides to use one of the 3 WAN frequency pairs in FIG. **26**. For example, consider that the second pair is chosen. The transmitter chain **2001**, which is used for both WAN and peer to peer transmit signaling, and the second receiver chain **2005**, which is used for peer to peer signal reception, are tuned to f_{UL2}. The first receiver chain **2003**, which is used to receive WAN signals, is tuned to f_{DL2}.

FIG. **27** includes a flowchart **2200** of an exemplary method of operating a multi-mode wireless communications device and exemplary timing structure **2250** information in accordance with various embodiments. Operation of the exemplary method starts in step **2202**, where the multi-mode wireless communications device is powered on and initialized. The multi-mode wireless communications device is, e.g., device **2000** of FIG. **25**. Operation proceeds from start step **2202** to step **2204**. In step **2204**, the wireless device tunes its transmitter chain to a first frequency band, said transmitter chain to be used for transmitting both uplink signals and peer to peer signals. In step **2206**, the wireless device tunes its first receiver chain to a second frequency band, said second frequency band being different from said first frequency band, said first receiver chain to be used for receiving WAN downlink signals. In step **2208**, the wireless device tunes its second receiver chain to the first frequency band, said second receiver chain to be used for receiving peer to peer signals. Operation proceeds from step **2208** to step **2210**.

In step **2210**, the wireless device receives input indicating operator selection of peer to peer mode enabling. Then, in step **2212**, the wireless communications device enables peer to peer mode as the primary mode of operation to be used. Operation proceeds from step **2212** to step **2214**. In step **2214**, the wireless device automatically switches between peer to peer mode and WAN mode of operation as a function of WAN paging intervals in a predetermined schedule. For example, consider multi-mode wireless communications device **2000** of FIG. **25**, when the schedule indicates that a paging interval is occurring the mode control module **2044** controls the switch **2032** to couple the 1st receiver chain **2003** to the ADC **2034**; however when the schedule indicates that a paging interval is not occurring the mode control module **2044** controls the switch **2032** to couple the 2nd receiver chain **2005** to the ADC **2034**.

Drawing **2250** of FIG. **27** indicates exemplary timing structure information which identifies exemplary WAN paging intervals (**2254**, **2258**) and exemplary peer to peer intervals (**2256**, **2260**), along time axis **2252** in an exemplary recurring timing structure.

FIG. **28** is a flowchart **2500** of an exemplary method of operating a multi-mode wireless communications device in accordance with various embodiments. The multi-mode wireless communications device is, e.g., device **2000** of FIG. **25**. Operation starts in step **2502**, where the multi-mode communications device is powered on and initialized and proceeds to step **2504**. In step **2504**, the wireless terminal selects a first frequency division duplex uplink/downlink pair, e.g., a pair of FDD frequency bands with associated tuner frequency settings, from among a plurality of alternative pairs. Drawing **2100** of FIG. **26** illustrates three exemplary FDD uplink/downlink pairs.

Operation proceeds from step **2504** to step **2506**, where the communications device tunes a first transmitter chain to generate transmission signals having a first RF frequency, and in step **2508**, the communications device tunes a first receiver chain to process received signals having a second RF frequency. Operation proceeds from step **2508** to step **2510** in which the communications device tunes a second receiver chain to process received signals having the said first RF frequency. In some embodiments, one or more of steps **2506**, **2508** and **2510** are performed in parallel. In various embodiments, the first RF frequency corresponds to the FDD uplink of the FDD pair selected in step **2504**, and the second RF frequency corresponds to the FDD downlink of the FDD pair selected in step **2504**.

Operation proceeds from step **2510** to step **2512**. In step **2512**, the communications device receives user input identifying a user choice for mode, e.g., peer to peer communications mode or wide area network communications mode. Operation proceeds from step **2512** to step **2514**. In step **2514**

the communications device proceeds along different paths depending upon whether or not peer to peer mode has been enabled by the user choice of step **2512**.

If peer to peer mode is enabled, then operation proceeds from step **2514** to step **2516**. If peer to peer mode is not enabled, then operation proceeds from step **2514** to step **2518**, where the communications device operates in a second mode of operation, e.g., a wide area network FDD mode of operation, using said transmitter chain and said first receiver chain.

Returning to step **2516**, in step **2516**, the communications device switches between use of said first and second receiver chains as a function of which one of a first mode and a second mode of operation a mode control module selects to be used at a given time. The switching is, in various embodiments, performed in an automatic or semi-automatic manner without user intervention. Step **2516** includes sub-steps **2520**, **2524**, **2526**, **2528**, **2530** and **2532**. In sub-step **2520**, the communications device identifies a time interval in a WAN reception schedule implemented by the communications device, and then in sub-step **2524**, the communications device determines whether or not the identified time interval in the WAN reception schedule indicates a WAN paging interval. If a paging interval is indicated, then operation proceeds from sub-step **2524** to sub-step **2526**; otherwise operation proceeds from sub-step **2524** to sub-step **2528**.

Returning to sub-step **2526**, in sub-step **2526**, the mode control module of the communications device selects the first mode, e.g., the FDD WAN mode of operation, and in sub-step **2530**, the communications devices switches to use the 1st receiver chain. Returning to sub-step **2528**, in sub-step **2528**, the mode control module of the communications device selects the second mode, e.g., the peer to peer communications mode of operation, and in sub-step **2532**, the communications devices switches to use the 2nd receiver chain.

If operation had proceeded through sub-step **2530**, then operation proceeds to step **2534**; while if operation had proceeded through sub-step **2532**, then operation proceeds to step **2536**. In step **2534**, the communications device is operated in the first mode of operation, e.g., the FDD WAN mode, using the 1st receiver chain to receive WAN paging signals. In step **2536**, the communications device is operated in the second mode of operation, e.g., the peer to peer mode of operation, using the 2nd receiver chain and the transmitter chain. In various embodiments, when a user enables peer to peer operation, the communications device operates predominately in the 2nd mode using the 2nd receiver chain; however, during at least some paging intervals of the WAN timing structure, the communications device operates in the first mode using the 1st receiver chain. Operation proceeds from one of step **2534** and step **2536** to step **2516** to identify and consider mode and switching pertaining to another time interval.

FIG. **29** is a flowchart **2600** of an exemplary method of operating a multi-mode wireless communications device in accordance with various embodiments. The multi-mode wireless communications device is, e.g., device **2000** of FIG. **25**. Operation starts in step **2602**, where the multi-mode communications device is powered on and initialized and proceeds to step **2604**. In step **2604**, the wireless terminal selects a first frequency division duplex uplink/downlink pair, e.g., a pair of FDD frequency bands with associated tuner frequency settings, from among a plurality of alternative pairs. Drawing **2100** of FIG. **26** illustrates three exemplary FDD uplink/downlink pairs.

Operation proceeds from step **2604** to step **2606**, where the communications device tunes a first transmitter chain to generate transmission signals having a first RF frequency, and in step **2608**, the communications device tunes a first receiver chain to process received signals having a second RF frequency. Operation proceeds from step **2608** to step **2610** in which the communications device tunes a second receiver chain to process received signals having the said first RF frequency. In some embodiments, one or more of steps **2606**, **2608** and **2610** are performed in parallel. In various embodiments, the first RF frequency corresponds to the FDD uplink of the FDD pair selected in step **2604**, and the second RF frequency corresponds to the FDD downlink of the FDD pair selected in step **2604**.

Operation proceeds from step **2610** to step **2612**. In step **2612**, the communications device switches between use of the first and second receiver chains as a function of which one of a first mode, e.g., a wide area network FDD mode and a second mode, e.g., a peer to peer mode of operation, a mode control module selects to be used at a given point in time. For example, the multi-mode communications device uses the transmitter irrespective of whether the communications device is in the wide area network FDD mode or in the peer to peer mode. However, with respect to reception, the multi-mode communications device uses the first receiver chain when in the WAN FDD mode and uses the second receiver chain when in the peer to peer mode of operation. Thus the WAN communications are FDD, and the peer to peer communications are TDD with the peer to peer communications sharing the WAN FDD uplink band.

Step **2612** includes sub-steps **2614**, **2616** and **2618**. In sub-step **2614**, the communications device determines a reception priority corresponding to receiving wide area network signals, and in sub-step **2616**, the communications device determines a reception priority corresponding to receiving peer to peer signals. Then, in sub-step **2618**, the communications device selects between first and second modes as a function of relative reception priority.

Operation proceeds from the output of step **2612** to the input of step **2612**. Over time reception priorities may, and sometimes do change, e.g., due to a particular user of the communications device, service level information, type of data to be communicated, amounts of data to be communicated, latency considerations, etc.

FIG. **30** is a flowchart **2700** of an exemplary method of operating a multi-mode wireless communications device in accordance with various embodiments. The multi-mode wireless communications device is, e.g., device **2000** of FIG. **25**. Operation starts in step **2702**, where the multi-mode communications device is powered on and initialized and proceeds to step **2704**. In step **2704**, the wireless terminal selects a first frequency division duplex uplink/downlink pair, e.g., a pair of FDD frequency bands with associated tuner frequency settings, from among a plurality of alternative pairs. Drawing **2100** of FIG. **26** illustrates three exemplary FDD uplink/downlink pairs.

Operation proceeds from step **2704** to step **2706**, where the communications device tunes a first transmitter chain to generate transmission signals having a first RF frequency, and in step **2708**, the communications device tunes a first receiver chain to process received signals having a second RF frequency. Operation proceeds from step **2708** to step **2710** in which the communications device tunes a second receiver chain to process received signals having the said first RF frequency. In some embodiments, one or more of steps **2706**, **2708** and **2710** are performed in parallel. In various embodiments, the first RF frequency corresponds to the FDD uplink of the FDD pair selected in step **2704**, and the second RF frequency corresponds to the FDD downlink of the FDD pair selected in step **2704**.

Operation proceeds from step **2710** to step **2712**. In step **2712**, the communications device monitors for a handoff indicator signal. For a detected handoff indicator signal, operation proceeds from step **2712** to step **2714**.

In step **2714**, the communications device determines whether or not the handoff is from a peer to peer communications link to a WAN communications link. If the handoff is determined to be from a peer to peer communications link to a WAN link, then operation proceeds from step **2714** to step **2716**; otherwise operation proceeds from step **2714** to step **2718**.

In step **2718**, the communications device determines whether or not the handoff is from a WAN communications link to a peer to peer communications link. If the handoff is determined to be from a WAN communications link to a peer to peer link, then operation proceeds from step **2718** to step **2720**; otherwise operation proceeds from step **2718** to step **2712** since the type of link has not changed, e.g., a handoff is occurring between different base stations or different base station sectors within the WAN network, and switching between receivers is not performed.

Returning to step **2716**, in step **2716** the communications device switches from a second mode of operation, e.g., a peer to peer mode of operation, to a first mode of operation, e.g., a WAN mode of operation. Returning to step **2720**, in step **2720** the communications device switches from a first mode of operation, e.g., a WAN mode of operation, to a second mode of operation, e.g., a peer to peer mode of operation. Operation proceeds from one of steps **2716** and **2720** to step **2722**.

In step **2722**, the communications device switches between use of said first and second receiver chains as a function of which one of said first mode, e.g., a wide area network FDD mode, and said second mode of operation, e.g., a peer to peer communication mode of operation is selected to be used at a given time. For example, if operation proceeded along step **2716**, then switching occurs such that the receiver chain usage transitions from the second receiver chain to the first receiver chain. Continuing with the example, if operation had proceeded along step **2720**, then, switching occurs such that the receiver chain usage transitions from the first receiver chain to the second receiver chain. Operation proceeds from step **2722** to step **2712** to monitor for additional handoff indicator signals.

In various embodiments, the same transmitter chain is used in both the WAN FDD mode of operation, e.g., a cellular mode of operation, and in the peer to peer mode of operation, e.g., a TDD peer to peer mode of operation. However, a different receiver chain is utilized when in the WAN mode of operation as compared to when in the peer to peer mode of operation. In various embodiments the TDD peer to peer mode of operation uses the same frequency band for both transmission and reception as is used in the WAN for uplink signaling.

In some embodiments, a cellular based communications system using at least one of TDD and FDD accommodates peer to peer signaling with at least some of the peer to peer signaling sharing air link resources also used for uplink wide area network, e.g., cell based, uplink signaling. In some embodiments, a typical cellular based communications system using at least one of TDD and FDD is modified to accommodate peer to peer signaling with at least some of the peer to peer signaling sharing air link resources typically reserved for uplink wide area network, e.g., cell based, uplink signaling. In some embodiments, many legacy communications devices supporting cell based signaling, but not peer to peer signaling, can continue to be used in the communications system. In various embodiments, a communications system supports a mixture of communications devices with at least some of the communications devices supporting peer to peer communications, but not supporting cell based communications. In some embodiments, a communications system supports a mixture of communications devices with at least some of the communications devices supporting both peer to peer communications and cell based communications.

While described primarily in the context of an OFDM system, the methods and apparatus of various embodiments are applicable to a wide range of communications systems including many non-OFDM and/or non-cellular systems. Some exemplary systems include a mixture of technologies utilized in the peer to peer signaling, e.g., some OFDM type signals and some CDMA type signals.

In various embodiments nodes described herein are implemented using one or more modules to perform the steps corresponding to one or more methods, for example, scanning an uplink bandwidth, evaluating a base station signal, determining a transmission power level control parameter, controlling peer to peer transmission power, measuring interference, determining a transmission power control value, transmitting a transmission power control parameter etc. In some embodiments various features are implemented using modules. Such modules may be implemented using software, hardware or a combination of software and hardware. Many of the above described methods or method steps can be implemented using machine executable instructions, such as software, included in a machine readable medium such as a memory device, e.g., RAM, floppy disk, etc. to control a machine, e.g., general purpose computer with or without additional hardware, to implement all or portions of the above described methods, e.g., in one or more nodes. Accordingly, among other things, various embodiments are directed to a machine-readable medium including machine executable instructions for causing a machine, e.g., processor and associated hardware, to perform one or more of the steps of the above-described method(s).

Numerous additional variations on the methods and apparatus described above will be apparent to those skilled in the art in view of the above descriptions. Such variations are to be considered within scope. The methods and apparatus of various embodiments may be, and in various embodiments are, used with CDMA, orthogonal frequency division multiplexing (OFDM), and/or various other types of communications techniques which may be used to provide wireless communications links between access nodes and mobile nodes. In some embodiments the access nodes are implemented as base stations which establish communications links with mobile nodes using OFDM and/or CDMA. In various embodiments the mobile nodes are implemented as notebook computers, personal data assistants (PDAs), or other portable devices including receiver/transmitter circuits and logic and/or routines, for implementing the methods of various embodiments.

What is claimed is:

1. A method of operating a base station, comprising:

measuring during an uplink null time period uplink background interference;

determining a change in the measured background interference;

determining a first transmission power control value as a function of the measured background interference and the determined change in the measured background interference; and

transmitting the first transmission power control value to one or more wireless terminals.

2. The method of claim **1**, further comprising:

storing interference budget information.

3. The method of claim 2, wherein determining said first transmission power control value includes using said stored interference budget information in combination with the measured background interference to generate said first transmission power control value.

4. The method of claim 3, wherein determining said first transmission power control value includes modifying a previous transmission power control value when said measured background interference exceeds an interference budget limit indicated by said stored interference budget information, the modified transmission power control value limiting peer to peer transmission power levels more than the previous transmission power control value.

5. The method of claim 4, wherein determining said first transmission power control value includes modifying the previous transmission power control value when said measured background interference is below said interference budget limit, the modified transmission power control value increasing peer to peer transmission power levels to a level higher than the levels controlled by the previous transmission power control value.

6. The method of claim 5, wherein said changing to a higher level is performed when said measured interference is below said interference budget limit by at least a predetermined threshold.

7. The method of claim 2, wherein said uplink null time period corresponds to a period of time in which at least a fraction of uplink bandwidth used by said base station is intentionally not used for transmitting uplink signals to the base station.

8. The method of claim 1, further comprising:

maintaining synchronization with at least one adjacent base station to maintain synchronization of uplink null time periods between adjacent base stations.

9. The method of claim 1, wherein determining said first transmission power control value is also a function of a difference between two previously transmitted transmission power control values.

10. The method of claim 9, wherein said previous measurement of background interference followed transmission of a second previous transmission power control value in said two previously transmitted transmission power control values.

11. A base station, comprising:

an interference measurement module for measuring during an uplink null time period uplink background interference;

a wireless terminal power control module for:

determining a change in the measured background interference;

determining a first transmission power control value as a function of the measured background interference and the determined change in the measured background interference; and

a transmitter module for transmitting the first transmission power control value to one or more wireless terminals.

12. The base station of claim 11, further comprising:

memory including stored interference budget information.

13. The base station of claim 12, wherein said wireless terminal power control module determines said first transmission power control value using said stored interference budget information in combination with the measured background interference to generate said first transmission power control value.

14. The base station of claim 13, wherein said wireless terminal power control module determines said first transmission power control value by operations including modifying a previous transmission power control value when said measured background interference exceeds an interference budget limit indicated by said stored interference budget information, the modified transmission power control value limiting peer to peer transmission power levels more than the previous transmission power control value.

15. The base station of claim 14, wherein said wireless terminal power control module determines said first transmission power control value by operations including modifying the previous transmission power control value when said measured background interference is below said interference budget limit, the modified transmission power control value increasing peer to peer transmission power levels to a level higher than the levels controlled by the previous transmission power control value.

16. The base station of claim 15, wherein said changing to a higher level is performed when said measured interference is below said interference budget limit by at least a predetermined threshold.

17. The base station of claim 12, wherein said uplink null time period corresponds to a period of time in which at least a fraction of uplink bandwidth used by said base station is intentionally not used for transmitting uplink signals to the base station, the memory further comprising:

stored timing structure information identifying said uplink null periods.

18. The base station of claim 11, further comprising:

a wide area network synchronization module for maintaining synchronization with at least one adjacent base station to maintain synchronization of uplink null time periods between adjacent base stations.

19. The base station of claim 11, wherein said wireless terminal power control module determines said first transmission power control value as a function of a difference between two previously transmitted transmission power control values.

20. The base station of claim 11, further comprising:

an interference type separation module for identifying a contribution of measured uplink interference associated with peer to peer signaling.

21. A base station, comprising:

interference measurement means for measuring during an uplink null time period uplink background interference;

means for determining a change in the measured background interference;

means for determining a first transmission power control value as a function of the measured background interference and the determined change in the measured background interference; and

means for transmitting the first transmission power control value to one or more wireless terminals.

22. The base station of claim 21, further comprising:

storage means containing interference budget information.

23. The base station of claim 21, further comprising:

means for maintaining synchronization with at least one adjacent base station to maintain synchronization of uplink null time periods between adjacent base stations.

24. The base station of claim 22, further comprising:

means for identifying a contribution of measured uplink interference associated with peer to peer signaling.

25. A non-transitory computer readable medium embodying machine executable instructions for controlling a base station to implement a method, the method comprising:

measuring during an uplink null time period uplink background interference;

determining a change in the measured background interference;

determining a first transmission power control value as a function of the measured background interference and the determined change in the measured background interference; and

transmitting the first transmission power control value to one or more wireless terminals.

26. The non-transitory computer readable medium of claim **25**, further embodying machine executable instructions for:

storing interference budget information.

27. The non-transitory computer readable medium of claim **26**, wherein determining said first transmission power control value includes using said stored interference budget information in combination with the measured background interference to generate said first transmission power control value.

28. The non-transitory computer readable medium of claim **25**, further embodying machine executable instructions for:

maintaining synchronization with at least one adjacent base station to maintain synchronization of uplink null time periods between adjacent base stations.

29. An apparatus comprising:

a processor configured to:

measure during an uplink null time period uplink background interference;

determine a change in the measured background interference;

determine a first transmission power control value as a function of the measured background interference and the determined change in the measured background interference from a previous measurement;

transmit the first transmission power control value in a signal to one or more wireless terminals.

30. The apparatus of claim **29**, wherein said processor is further configured to:

store interference budget information.

31. The apparatus of claim **30**, wherein said processor configuration to determine said first transmission power control value further includes being configured to use said stored interference budget information in combination with the measured background interference to generate said first transmission power control value.

32. The apparatus of claim **29**, wherein said processor is further configured to:

maintain synchronization with at least one adjacent base station to maintain synchronization of uplink null time periods between adjacent base stations.

* * * * *